REV.	SPECIFICATION	ECN NO.	APPD.

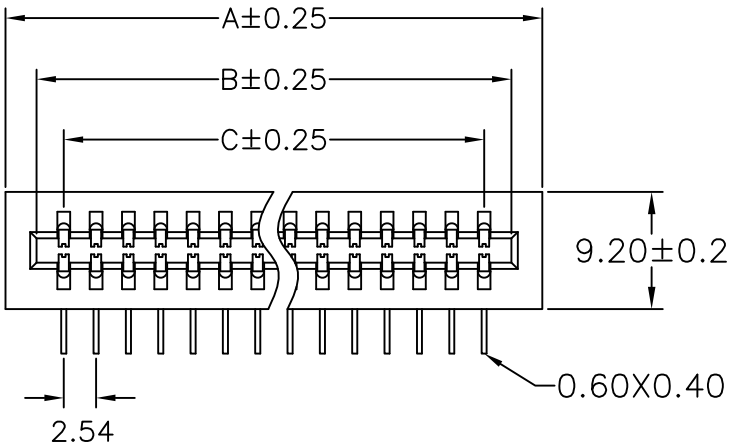

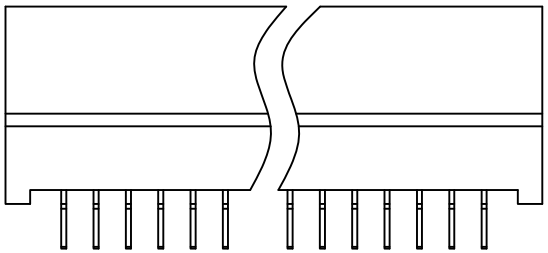

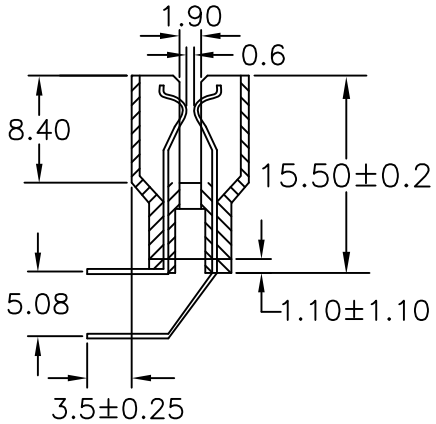

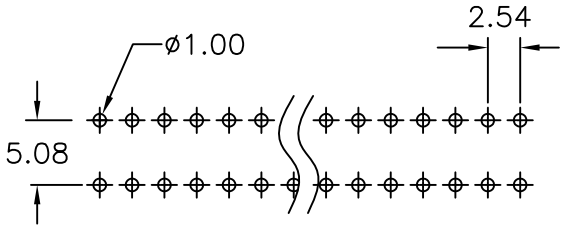

P.C. Board Layout

8006- xx CE R A -C50

- Series: 8006-
- No. of Pin Count: xx
- CE: Phosphor Bronze
- R: Right Angle
- A: Tray Package
- -C50: Blank: C00 Selective Gold Plated 50μ"

Material:

Housing: PBT, Glass Filled, UL94V-0, Black.
Contacts: Phosphor Bronze, Gold Plated on Contact Area and Tin Plated on Solder Tail over Nickel.

Electrical Characteristics:

Current Rating: 3 AMP.
Dielectric Withstanding Voltage: 800V AC 1 minute
Insulator Resistance: 5000MΩ min. at DC 500V
Contact Resistance: 20mΩ max. at DC 100mA.
Operating Temperature: -55°C~+105°C.

***RoHS Compliant**

Position	Dimension A	Dimension B	Dimension C	Position	Dimension A	Dimension B	Dimension C
6	14.22	10.36	5.08	40	57.40	53.54	48.26
8	16.76	12.90	7.62	44	62.48	58.62	53.34
10	19.30	15.44	10.16	48	67.56	63.70	58.42
12	21.84	17.98	12.70	50	70.10	66.24	60.96
14	24.38	20.52	15.24	60	82.80	78.94	73.66
16	26.92	23.06	17.78	62	85.34	81.48	76.20
20	32.00	28.14	22.86	64	87.88	84.02	78.74
24	37.08	33.22	27.94	70	95.50	91.64	86.36
26	39.62	35.76	30.48	72	98.06	94.18	88.90
28	42.16	38.30	33.02	80	108.20	104.34	99.06
30	44.70	40.84	35.56	86	115.82	111.96	106.68
32	47.24	43.38	38.10	98	131.06	127.20	121.92
34	49.78	45.92	40.64	100	133.60	129.74	124.46
36	52.32	48.46	43.18	108	143.76	139.90	134.62
38	54.86	51.00	45.72	120	159.00	155.14	149.86

Tolerances	Dwg. No.	8006D02003	Title: 8006 Series EDGE Connector 2.54mm	OUPIIN ELECTRONIC(KUNSHAN) CO., LTD.
x = ±0.50	Projection			P/N: 8006-xxCERA-C50
.x = ±0.25	Unit mm	Scale 1:1		SHEET 1/1 Ver.No. A9
.xx = ±0.15	Drawn By	Scott 08/05'16	①542	