REV.	SPECIFICATION	ECN NO.	APPD.

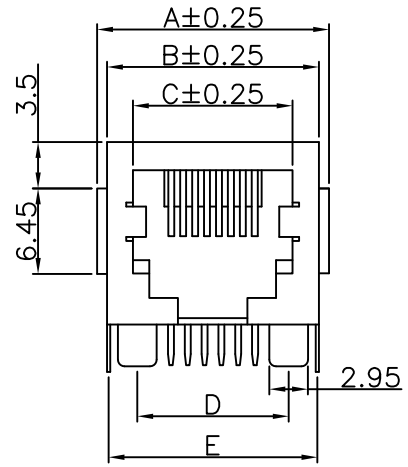

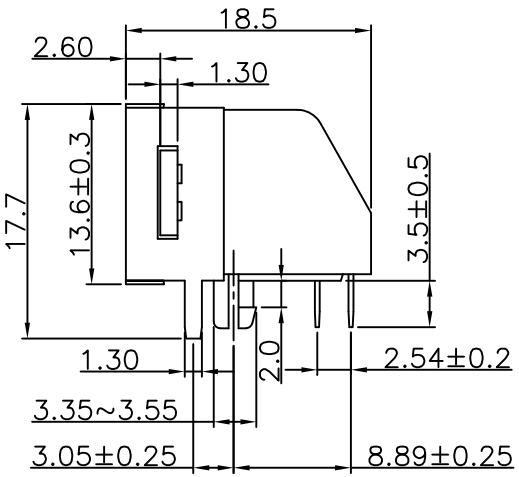

Material:

Housing: Thermoplastic Polyester Glass Filled UL94V-0.
Contacts: Copper Alloy.
Plating: Selective Gold plated on contact area over Nickel.
Shell: Copper Alloy.

Electrical Characteristics:

Current Rating: 1.5 AMP.
Insulator Resistance: 1000MΩ min. at DC 500V.
Contact Resistance: 30mΩ max. at DC 100mA.
Operating Temperature: -40°C~+85°C.

***RoHS Compliant**

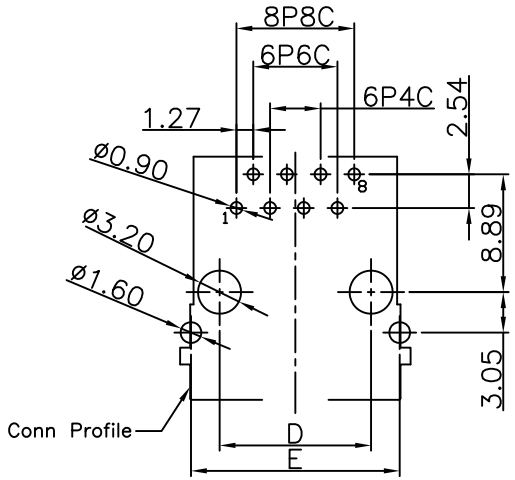

P.C. Board Layout

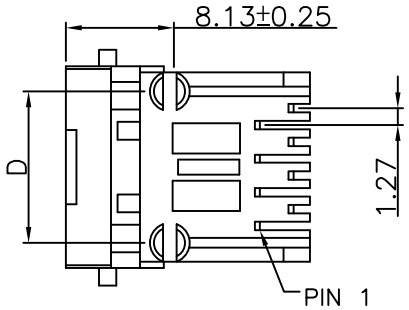

8949-C1	x	x	-06	S	B	A
Series	8: 8 Position Housing 6: 6 Position Housing	8: 8 Contacts Loaded 6: 6 Contacts Loaded 4: 4 Contacts Loaded 2: 2 Contacts Loaded	06: 6μ″ Gold Plated 10: 10μ″ Gold Plated 15: 15μ″ Gold Plated 30: 30μ″ Gold Plated	S: Shield	B: Black	A: Tray Package

No. of Position	No. of Contacts	Dimensions				
		A	B	C	D	E
6P	2C/4C/6C	15.9	14.0	9.90	10.16	13.72
8P	8C	17.5	16.0	11.91	11.43	15.43

Tolerances	Dwg. No.	8949D02079	Title:	OUPIIN ELECTRONIC(KUNSHAN) CO., LTD.
x = ±0.50 .x = ±0.25 .xx = ±0.20	Projection		8949-C1 Series Modular Jack	P/N: 8949-C1xx-06SBA
	Unit mm	Scale 1:1		SHEET 1/1 Ver.No. B1
	Drawn By	Vic Lyu10/17'14	563	