9001 Series

DIN41612 M Type Male

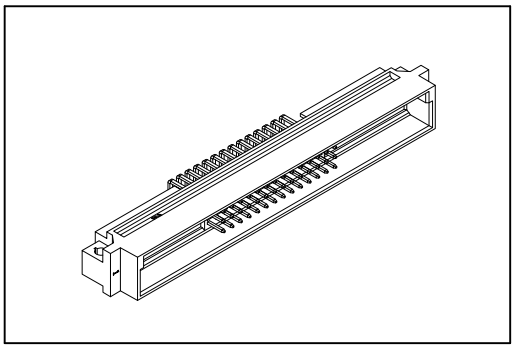

Material:

Housing: Thermoplastic Polyester Glass Filled UL94V-0.
Contacts: Copper Alloy.

Electrical Characteristics:

Current Rating: 2 A.
Dielectric Withstanding Voltage: AC 1000V.
Insulator Resistance: 1000MΩ min.
Contact Resistance: 20mΩ max.
Operating Temperature: -55°C ~+125°C.

Features:

* Mates with Female 9001-92
  9001-94

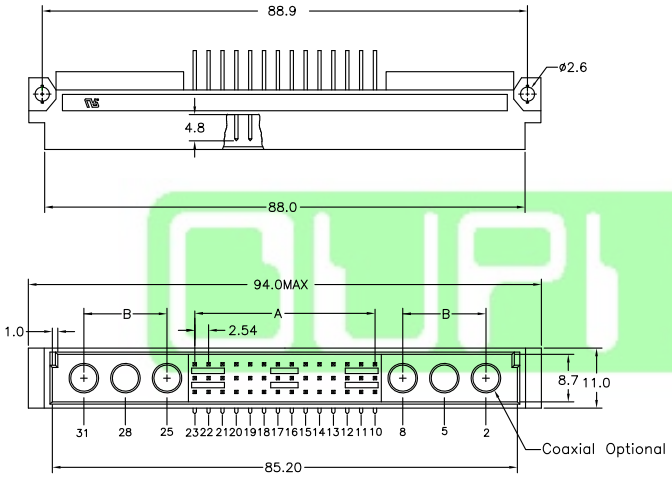

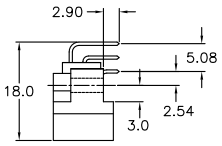

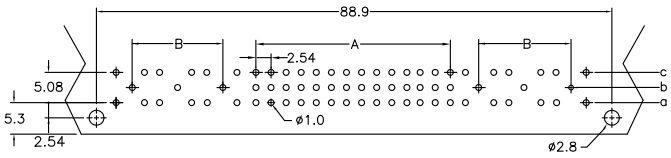

P.C. Board Layout (Coaxial)

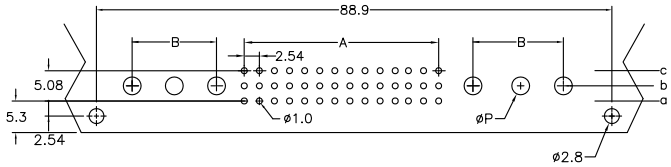

P.C. Board Layout (Power)

Current Rating(A)		10A	20A	30A	40A
Dimension(øP)		2.10	3.25	3.57	4.15
Dimension					
A	(2.54 x No of Contact)/3−2.54				
B	(7.62 x No of Coaxial)/2−7.62				
Pitch	Position	Rows with Contacts	Contact Arrange	with Coaxial Or Power	
2.54mm	78	a b c	7 6 5 4	2 Pcs	
	60	a b c	10 9 8 7	4 Pcs	
	42	a b c	13 12 11 10	6 Pcs	
	24	a b c	16 15 14 13	8 Pcs	
	6	a b c	19 18 17 16	10 Pcs	
	52	a − c	7 6 5 4	2 Pcs	
	40	a − c	10 9 8 7	4 Pcs	
	28	a − c	13 12 11 10	6 Pcs	
	16	a − c	16 15 14 13	8 Pcs	
	4	a − c	19 18 17 16	10 Pcs	

Ordering information

9001-	9	1	42	06	C	00	D	A
Series		1: Male	Position	02: With 2 Coaxial or Power 04: With 4 Coaxial or Power 06: With 6 Coaxial or Power 08: With 8 Coaxial or Power 10: With 10 Coaxial or Power	C: Selective Gold Plated	00: G/F	D: Dip Type	A: Tray Package

* The Special Contacts Must be Ordered Separately, Pls Refer to Page CC03.