9001 Series

DIN41612 M Type Female

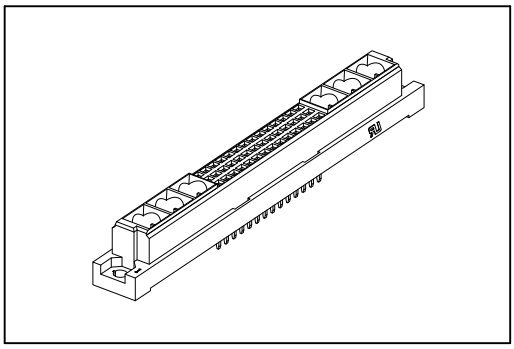

Material:

Housing: Thermoplastic Polyester Glass Filled UL94V-0.
Contacts: Copper Alloy.

Electrical Characteristics:

Current Rating: 2 A.
Dielectric Withstanding Voltage: AC 1000V.
Insulator Resistance: 1000MΩ min.
Contact Resistance: 20mΩ max.
Operating Temperature: -55°C ~+125°C.

Features:

* Mates with Male 9001-91
  9001-93

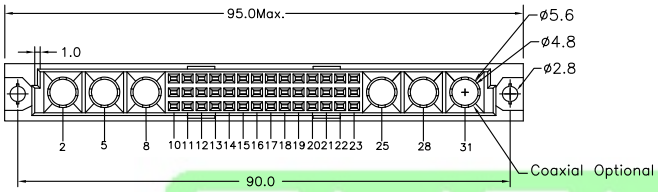

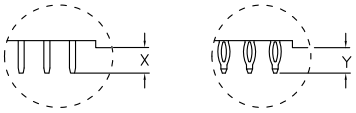

Dip Type Press Fit Type

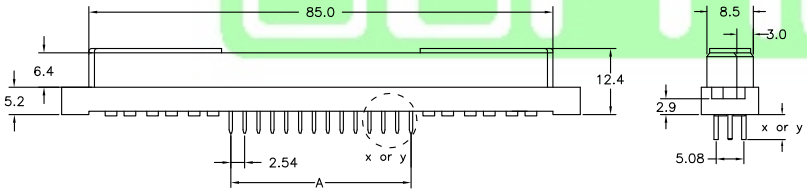

Current Rating(A)	10A	20A	30A	40A
Dimension(øP)	2.10	3.25	3.57	4.15

Length	1	2	W1	W2
X	4.0	2.5	13	17
Y	4.6	6.3	13	17

Dimension	
A	(2.54 x No of Contact)/3-2.54
B	(7.62 x No of Coaxial)/2-7.62

Pitch	Position	Rows with Contacts	Contact Arrange	with Coaxial Or Power
2.54mm	78	a b c	c b a 4 5 6 7	2 Pcs
	60	a b c	c b a 7 8 9 10	4 Pcs
	42	a b c	c b a 10 11 12 13	6 Pcs
	24	a b c	c b a 13 14 15 16	8 Pcs
	6	a b c	c b a 16 17 18 19	10 Pcs
	52	a – c	c a 4 5 6 7	2 Pcs
	40	a – c	c a 7 8 9 10	4 Pcs
	28	a – c	c a 10 11 12 13	6 Pcs
	16	a – c	c a 13 14 15 16	8 Pcs
	4	a – c	c a 16 17 18 19	10 Pcs

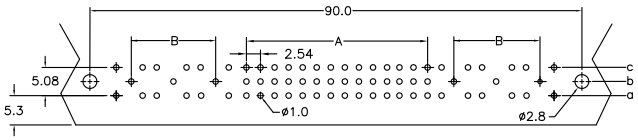

P.C. Board Layout (Coaxial)

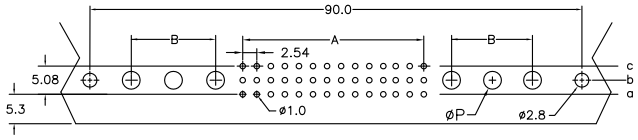

P.C. Board Layout (Power)

Ordering information

9001-	9	2	42	06	1	C	00	D	A
Series		2: Female	Position	02: With 2 Coaxial or Power 04: With 4 Coaxial or Power 06: With 6 Coaxial or Power 08: With 8 Coaxial or Power 10: With 10 Coaxial or Power	1: Dip Length 2: Dip Length W1: Dip Length W2: Dip Length	C: Selective Gold Plated	00: G/F	D: Dip Type P: Press Fit Type	A: Tray Package

* The Special Contacts Must be Ordered Separately, Pls Refer to Page CC03.