9114-A Series

High Flow Power

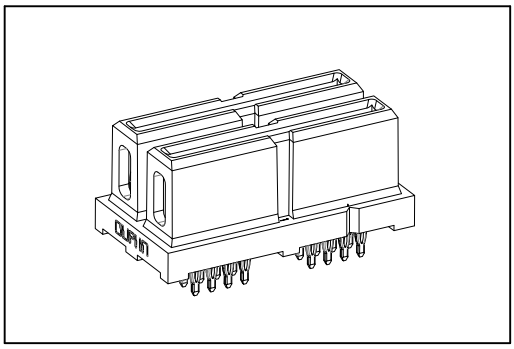

Material:

Housing: High Temperature Plastic UL94V-0.
Contacts: Copper Alloy.

Electrical Characteristics:

Current Rating: 35 A(2oz*2)@25°C ambient;
45 A(2oz*4)@25°C ambient.
Dielectric Withstanding Voltage: AC 1500V.
Insulator Resistance: 1500MΩ min.
Contact Resistance: 0.5mΩ max.
Operating Temperature: -55°C ~+125°C.

Features:

* Additional plating options available.
* Mates with 9113-A.

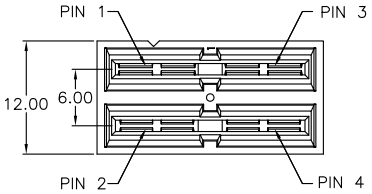

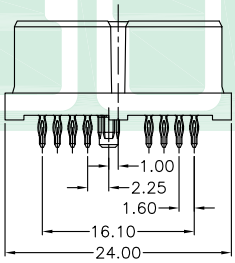

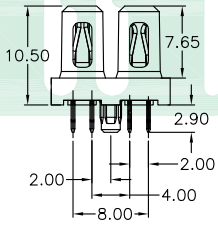

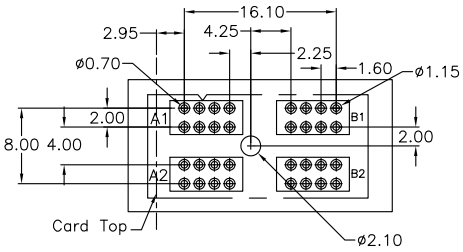

P.C. Board Layout

Long PIN
Short PIN

Type No.	Product No.
	9114–A22ACB30PPA
	9114–A22BCB30PPA

Ordering information

9114-	A	2	2	A	CB	30	P	P	A
Series	A:Type A	2:2Row	2:Power Pin	A:A Type B:B Type	CB:Contact Au+Pd/Ni, Dip Tin plated	30: 30 μ"	P: Press Fit Type	P: With Post N: W/O Post	A: Tray Package

Information including designs, specifications and components may be changed or updated without notice.