REV.	SPECIFICATION	ECN NO.	APPD.
X5			

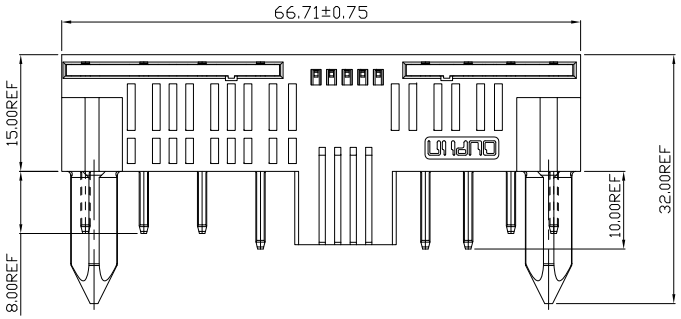

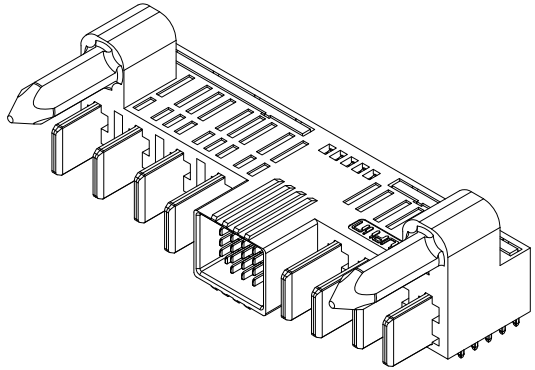

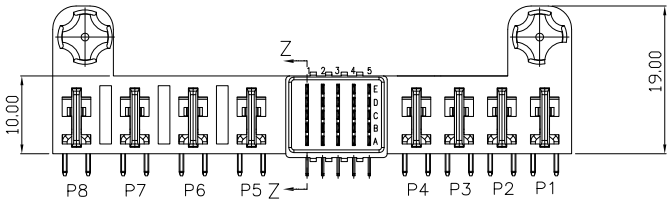

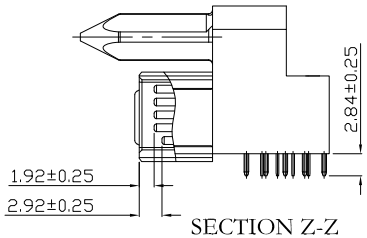

SECTION Z-Z

Material and Plating:

Housing: LCP, 30% Glass Filled,UL94V-0 , BLACK.

Power Contacts: High Conductivity Copper .
Au(3u")+Pd/Ni (27u") gold plated on Contact Area and 80u" Min
Tin Plated on Solder Tail over nickel 50u" Min under plated .

Signal Contacts :Brass .
Au(3u")+Pd/Ni (27u") gold plated on Contact Area and 80u" Min
Tin Plated on Solder Tail over nickel 50u" Min under plated .

Electrical Characteristics:

Current Rating: Signal Pin 2.5 AMP.
Power Pin 60 AMP.

Dielectric Withstanding Voltage: DC 1500V For 1 minute.

Insulator Resistance: 5000MΩ min. at DC 500V.

Contact Resistance: Signal Pin 30mΩ max.
Power Pin 0.3mΩ max.

Operating Temperature: -40°C ~+105°C .

***RoHS Compliant**

Notes 1:

L: Low Power---PCB Mount 3.0mm Pitch
D: DC Power---PCB Mount 5.5mm Pitch
A: AC Power---PCB Mount 7.5mm Pitch

Notes 2:

A1: Signal Pin to The Top Distance is 2.92mm.
Other Signal: Signal Pin to The Top Distance is 1.92mm.

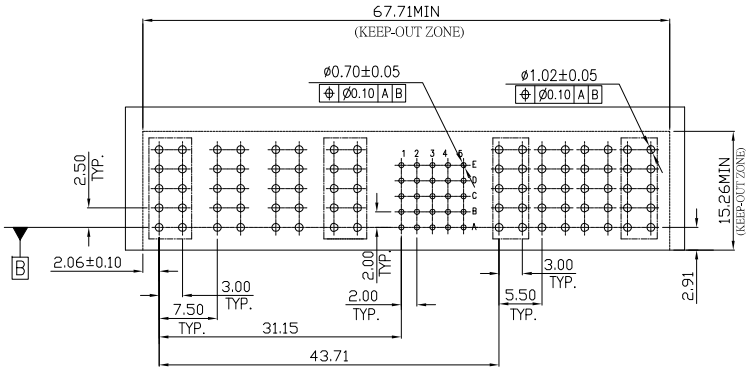

P.C.Board Layout
(Tolerance:±0.05)

9395- 1 A04 S25 D04 B 7 1 D N G1 A -A001

- Series: 9395-
- 1: Male Right Angle
- Blank:Without Contact / Power Contact: Axx, Dxx , Lxx / No. of position: A04
- Blank:Without Contact / Signal Contact: S xx / No. of position: S25
- Blank:Without Contact / Power Contact: Axx, Dxx , Lxx / No. of position: D04
- B: Dip Tin Plated, Contact Au+Pd/Ni Plated
- 7: 30u"
- 1 : With Rib
- D: Dip Type
- N: Without Post
- P: With Post
- G1: Guides Top
- A: Tray Package
- Internal Code: -A001

Tolerances	Dwg. No.	9395-D0000-006	Title: 9395 Series Max P60 10mm Low Profile, 60Amp Plug, Right Angle,FMLB	OUPIIN ELECTRONIC(KUNSHAN) CO., LTD.
x = ±0.5	Projection			P/N: 9395-1A04S25D04B71DNG1A-A001
.x = ±0.25	Unit mm	Scale 1:1		SHEET 1/1 Ver. No. X5
.xx = ±0.15	Drawn By	LQ 07/02'16		