REV.	SPECIFICATION	ECN NO.	APPD.
X5			

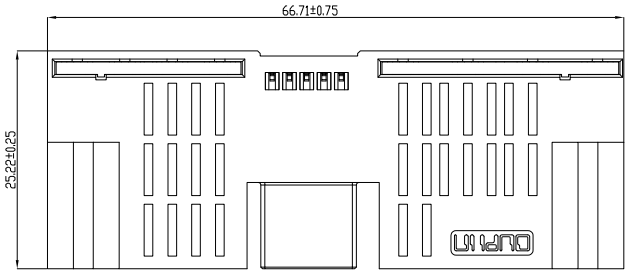

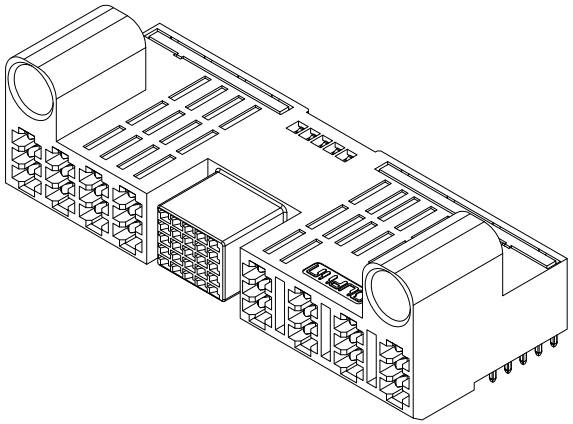

Material and Plating:

Housing: LCP, 30% Glass Filled,UL94V-0 , BLACK.
Power Contacts: High Conductivity Copper .
Au(3u")+Pd/Ni (27u") gold plated on Contact Area and 80u" Min
Tin Plated on Solder Tail over nickel 50u" Min under plated .
Signal Contacts : Phosphor Bronze .
Au(3u")+Pd/Ni (27u") gold plated on Contact Area and 80u" Min
Tin Plated on Solder Tail over nickel 50u" Min under plated .

Electrical Characteristics:

Current Rating: Signal Pin 2.5 AMP.
Power Pin 60 AMP.
Dielectric Withstanding Voltage: DC 1500V For 1 minute.
Insulator Resistance: 5000MΩ min. at DC 500V.
Contact Resistance: Signal Pin 30mΩ max.
Power Pin 0.3mΩ max.
Operating Temperature: -40°C ~+105°C .

***RoHS Compllant**

Notes :
L: Low Power---PCB Mount 3.0mm Pitch
D: DC Power---PCB Mount 5.5mm Pitch
A: AC Power---PCB Mount 7.5mm Pitch

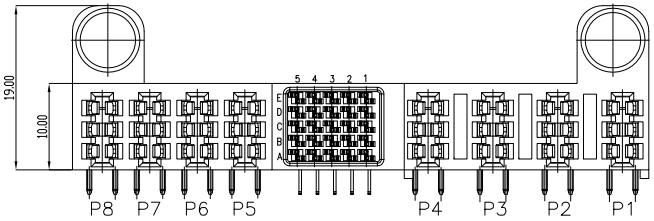

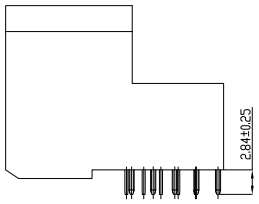

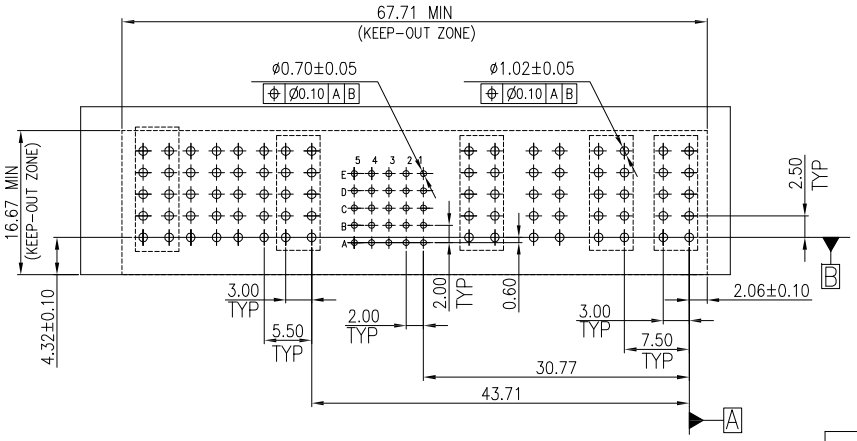

P.C.Board Layout
(Tolerance:±0.05)

9395- 4 D04 S25 A04 B 7 2 D N G1 A

- Series: 9395-
- 4: Female Right-angle
- D04: Blank:Without Contact; Power Contact: Axx, Dxx , Lxx; No. of position
- S25: Blank:Without Contact; Signal Contact: S xx; No. of position
- A04: Blank:Without Contact; Power Contact: Axx, Dxx , Lxx; No. of position
- B: B: Dip Tin Plated, Contact Au+Pd/Ni Plated
- 7: 7: 30u"
- 2: 2：Without Rib
- D: D: Dip Type
- N: N: Without Post
- G1: G1: Guides Top
- A: A: Tray Package

Tolerances	Dwg. No.	9395-D0000-004	Title: 9395 Series Max P60 10mm Low Profile, 60Amp Receptable, Right Angle	OUPIIN ELECTRONIC(KUNSHAN) CO., LTD.
x = ±0.5	Projection			P/N: 9395-4D04S25A04B72DNG1A
.x = ±0.25	Unit mm	Scale 1:1		SHEET 1/1 Ver. No. X5
.xx = ±0.15	Drawn By	LQ 07/02'16		