HSF

NOTE:
1.MATERIAL:
1.1 INSULATOR: LCP+30%G.F, UL94V-0; BLACK.
1.2 CAP: LCP+30%G.F, UL94V-0; BLACK.
1.3 CONTACT: PHOSPHOR BRONZE.
1.4 MOUNTING EAR: PHOSPHOR BRONZE.
2.FINISH:
2.1 CONTACT: 3u" OR 5u" MIN. GOLD PLATED IN CONTACT AREA
B3 80u" MIN. TIN PLATED IN SOLDER AREA
50u" MIN. NICKEL UNDERPLATED OVERALL.
2.2 MOUNTING EAR: 100u" MIN. TIN PLATED OVER
50u" MIN. NICKEL UNDERPLATED OVERALL.
3.ELECTRICAL CHARACTERISTICS
3.1 CURRENT RATING: 0.5A.
3.2 CONTACT RESISTANCE: 65mΩ MAX.
3.3 INSULATION RESISTANCE: 1000MΩ MIN DC500V.
3.4 DIELECTRIC WITHSTANDING VOLTAGE: 250V AC PER MINUTE.
3.5 OPERATING TEMPERATURE: -40°C ~ +105°C.
3.6 OPERATING: 100 CYCLES MIN.
3.7 INSERTION FORCE: 90g MAX. Per PIN Pair.
3.8 WITHDRAWAL FORCE: 10g MIN. Per PIN Pair.
3.9 CONTACT RETENTION FORCE: 250g MIN. PER CONTACT
3.10 STORAGE TEMPERATURE: -10°C ~ +40°C.

Flatness: <80Pins The "M" Is 0.10mm MAX
B3 ≥80Pins The "M" Is 0.15mm MAX

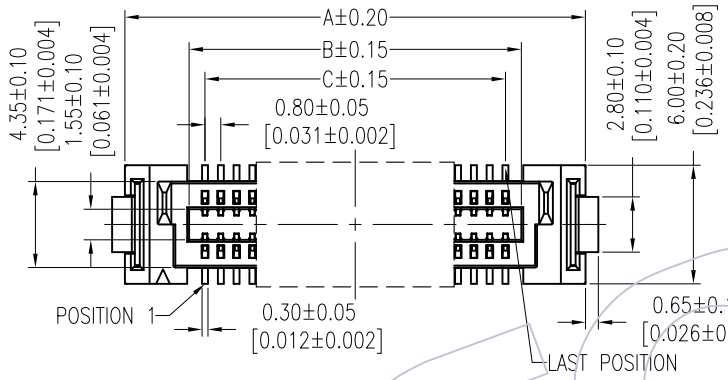

Recommended P.C.B Layout (Top Side)
(PCB BOARD TOLERANCE ± 0.05)

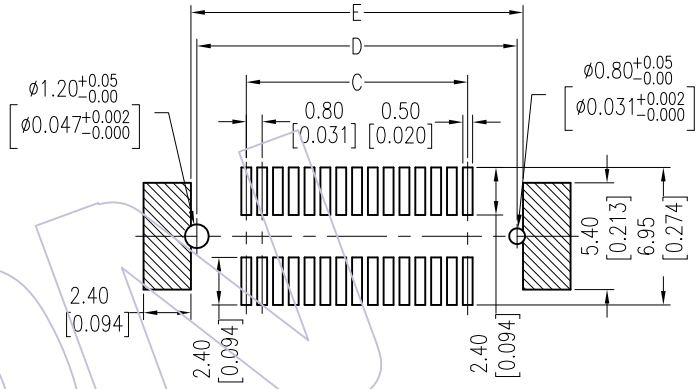

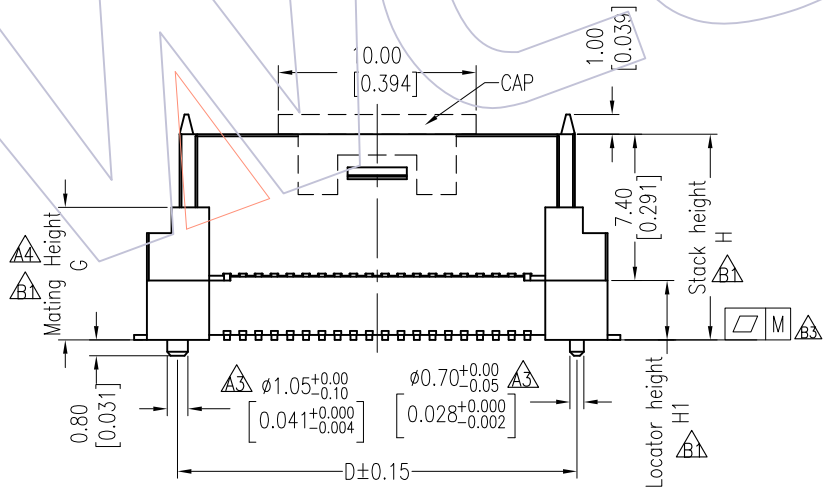

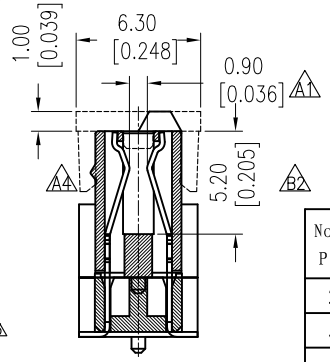

Dim H	Dim G	Dim H1
7.40	4.00	---
10.40	7.00	3.00
11.40	8.00	4.00
12.40	9.00	5.00
13.40	10.00	6.00

Ordering Information

3614- S XXX - XXX XX R 01

No.of Pins | High "H" | Contact Plating | Packing

B3 S1=3u"Gold/Tin
S2=5u"Gold/Tin

R=Tape&Reel+CAP

No. of Pins	Dimension				
	A	B	C	D	E
20	15.30	8.80	7.20	12.20	12.80
30	19.30	12.80	11.20	16.20	16.80
40	23.30	16.80	15.20	20.20	20.80
60	31.30	24.80	23.20	28.20	28.80
80	39.30	32.80	31.20	36.20	36.80
100	47.30	40.80	39.20	44.20	44.80
120	55.30	48.80	47.20	52.20	52.80
160	71.30	64.80	63.20	68.20	68.80

REV	DATE	MODIFICATION DESCRIPTION	CHANGE
B3	2013/06/26	ADD NEW PLATED TYPE	B3
B2	2012/08/14	Modify Drawing	B2
B1	2012/07/24	MODIFY	B1
A0	2010/03/09	NEW	—

OPERATION	
X.X	±0.40
X.XX	±0.25
X.XXX	±0.15
Angle	± 3°
DIM	TOL

DRAW Tsingsn	DATE 2013/06/26	SCALE	FIT
CHECK	DATE	UNIT	mm / inch
APPROVE	DATE	SIZE	A4
		SHEET	1/1
		PROJ.	

PART NO. 3614-SXXX-XXXXXR01

TITLE: 0.80mm BTB FEMALE "D" TYPE 180° SMT A0

Customer NO.