HSF

NOTES:
Current Rating:1.0AMP
Contact Resistance:20mΩ max
Withstand Voltage:500V AC/DC
Insulation Resistance:1000MΩ min
Operation Temperature:−40℃ to +105℃

Contact Material:Brass
Contact plating:Au or Sn Over Ni
Insulator Material:LCP+30%GF(UL94V−0) A4 A5

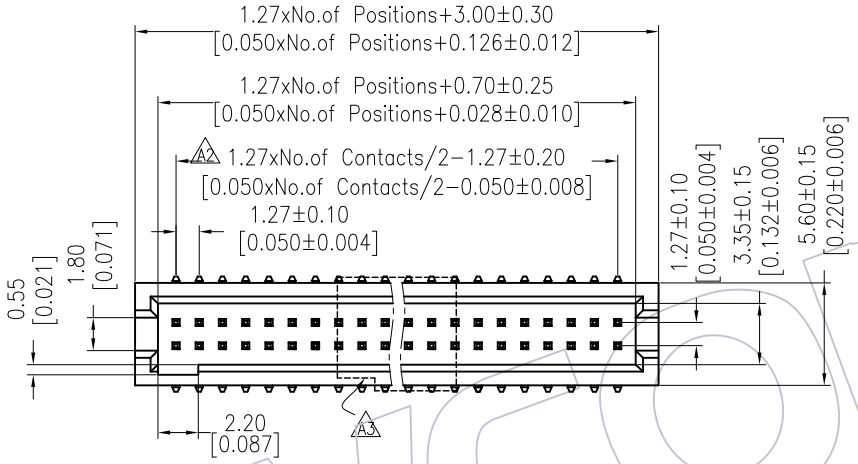

Recommended P.C.B Layout (Top Side)
(PCB BOARD TOLERANCE ± 0.05)

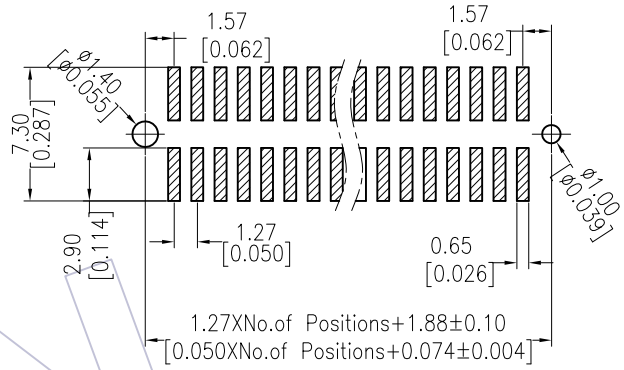

Ordering Information

3100-XX M XX BXXX X 1

No.of Pins	Contact Plating	Total High	Packing
10 34	G0=Gold Flash	089=8.9mm	T=Tube
14 40	G1=3u"Gold	095=9.5mm	P=Tube+CAP
16 44	G2=5u"Gold	099=9.9mm	R=Tape&Reel+CAP
20 50	G3=10u"Gold	101=10.1mm	
24 60	G4=15u"Gold	109=10.9mm	
26 64	G5=30u"Gold	112=11.2mm	
30 80	S0=Gold Flash/Tin	115=11.5mm	
32 100	S1=3u"Gold/Tin	117=11.7mm	
	S2=5u"Gold/Tin	120=12.0mm	
	S3=10u"Gold/Tin	127=12.7mm	
	S4=15u"Gold/Tin	146=14.6mm	
	S5=30u"Gold/Tin	157=15.7mm	
	SN=Tin	161=16.1mm	
		178=17.8mm	
		191=19.1mm	

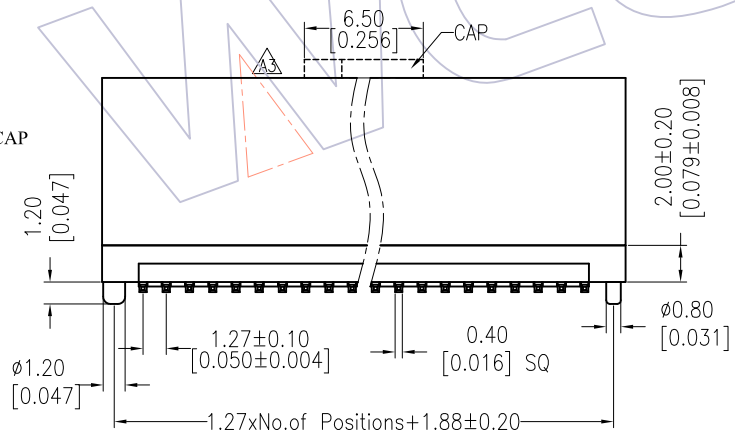

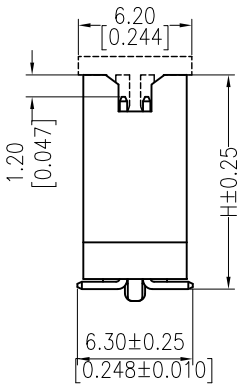

REV	DATE	MODIFICATION DESCRIPTION	CHANGE
B0	2015/04/17	Modify	B0
A5	2014/12/25	Modify	A5
A4	2014/07/18	Modify	A4
A0	2008/05/02	NEW	——

OPERATION	
X.X	±0.40
X.XX	±0.25
X.XXX	±0.15
Angle	± 3°
DIM	TOL

DRAW Allen	DATE 2015/04/17	SCALE	FIT
CHECK	DATE	UNIT	mm / inch
APPROVE	DATE	SIZE	A4
		SHEET	1/1
		PROJ.	

PART NO. 3100-XXMXXBXXXX1

TITLE: 1.27 BOX HEADER SMT WITH POST

Customer NO.