HSF

NOTES:
Current Rating: 2.0AMP
Contact Resistance: 20mΩ Max
Withstand Voltage: 500V AC/DC
Insulation Resistance: 1000MΩ Min
Operation Temperature: −40℃ to +105℃

Contact Material: Phosphor Bronze
Contact plating: Au Or Sn over Ni
Insulator Material: PA9T+30%GF UL94V−0

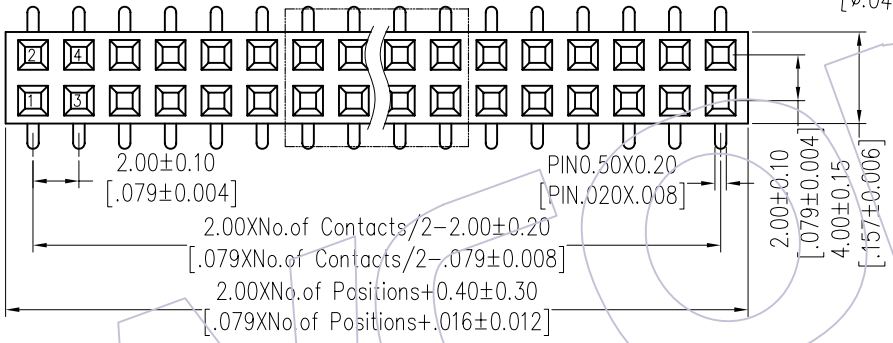

Recommended P.C.B Layout(Top Side)
(PCB BOARD TOLERANCE±0.05)

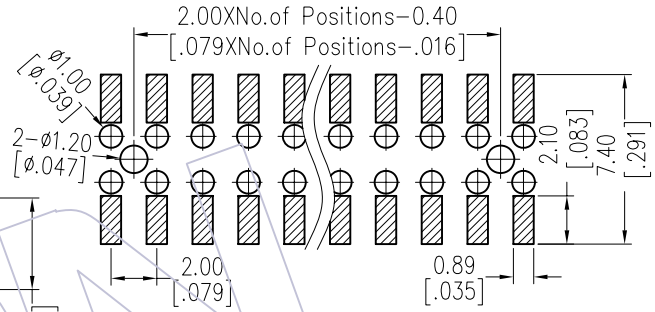

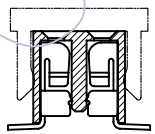

TYPE 1 W/O POST

Ordering Information

2240N - 2 XX M XX C U N T X

- No.of Pins per ROW:02~40PIN
- Contact Plating:
  G0=Gold Flash
  G3=10μ"Gold
  G4=15μ"Gold
  G5=30μ"Gold
  S0=Gold Flash/Tin
  S3=10μ"Gold/Tin
  S4=15μ"Gold/Tin
  S5=30μ"Gold/Tin
  SN=Tin
  SM=Matte Tin
- Packing:
  T=Tube
  P=Tube+CAP
  R=Tape&Reel+CAP
- Series No.
  1=Type 1
  2=Type 2

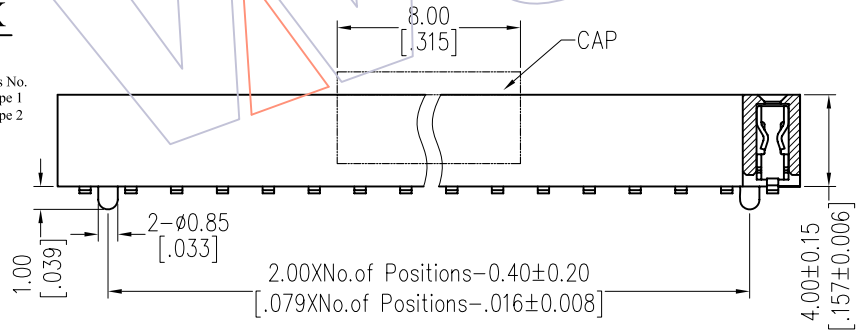

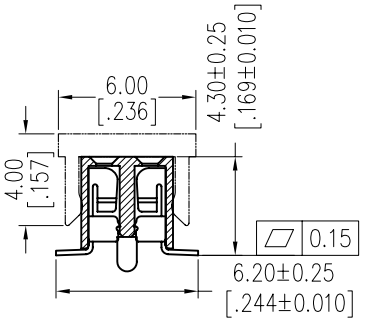

TYPE 2 WITH POST

Item	Pitch	Mating
Standard	2.00	1215/1220
Alternate		

TITLE	PART NO.
TYPE 1	2240N−2XXMXXCUNT1
TYPE 2	2240N−2XXMXXCUNT2

REV	DATE	MODIFICATION DESCRIPTION	CHANGE
A0	2012/07/13	NEW	------

OPERATION	
X.X	±0.40
X.XX	±0.25
X.XXX	±0.15
Angle	± 3°
DIM	TOL

DRAW	JYHuang	DATE	2012/07/13
CHECK		DATE	
APPROVE		DATE	

SCALE	FIT
UNIT	mm
SIZE	A4
SHEET	1/1
PROJ.	

PART NO.
SEE TABLE

TITLE:
FH2.00mm DUAL ROW 180° SMT
H=4.0 W=4.0

Customer NO.