HSF

NOTES:
Current Rating: 3.0AMP
Contact Resistance: 20mΩ Max
Withstand Voltage: 1000V AC/DC
Insulation Resistance: 1000MΩ Min
Operation Temperature: −40℃ to +105℃

Contact Material: Brass
Contact plating: Au Or Sn over Ni
Latch Material: Zinc Alloy
Latch plating: Ni
Insulator Material: PBT or PA9T+30%G.F UL94V−0
Above 20 Poles With "E" Profile.

Recommended P.C.B Layout(Top Side)
(PCB BOARD TOLERANCE±0.05)

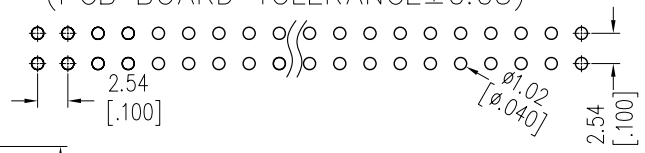

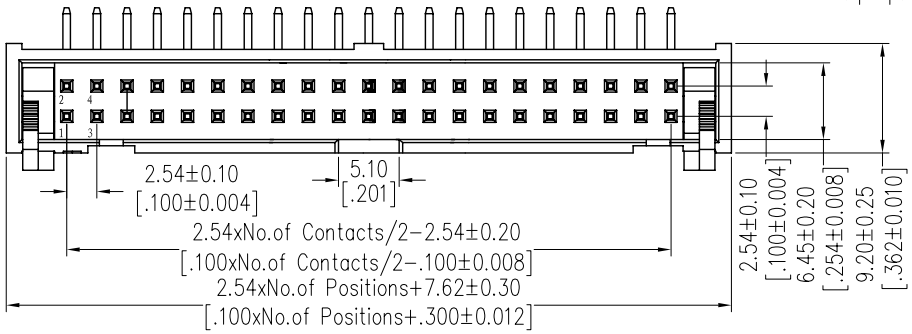

Ordering Information

3211 - XX R XX B X X 1

No.of Pins	Contact Plating	Insulator Color	Latch Type	Packing
06 26	G0=Gold Flash	B=Black	L=Long Latch	A=Tray
08 30	G3=10u"Gold	U=Blue	S=Short Latch	T=Tube
10 34	G4=15u"Gold	G=Grey(427C)		
14 40	G5=30u"Gold	E=Grey(413C)		
16 50	S0=Gold Flash/Tin			
20 60	S3=10u"Gold/Tin			
64	S4=15u"Gold/Tin			
	S5=30u"Gold/Tin			
	SN=Tin			

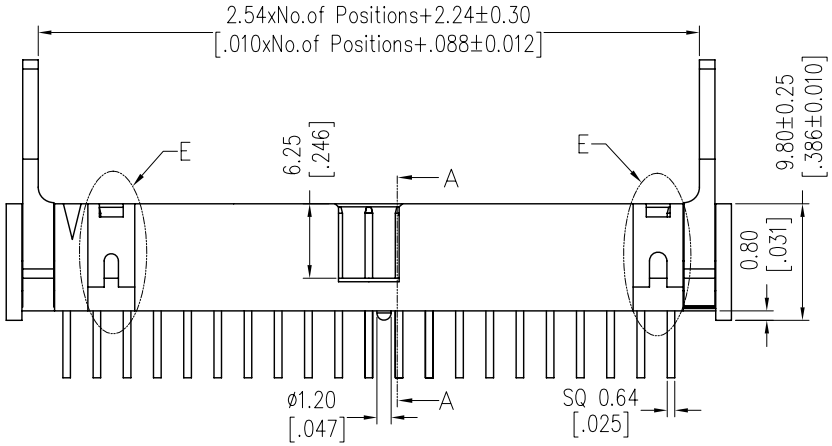

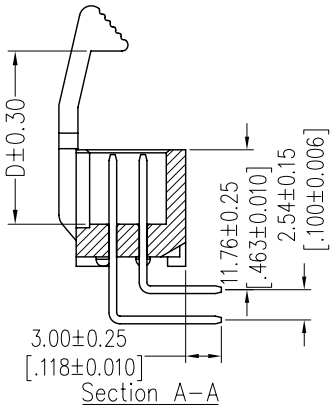

Item	Pitch	Mating
Standard	2.54	5211/5212
Alternate		

Dimension antitheses list	
PART NO	D
3211-XXRXXBLX1	14.55
3211-XXRXXBSX1	10.65

REV	DATE	MODIFICATION DESCRIPTION	CHANGE
A0	2012/10/08	NEW	------

OPERATION	
X.X	±0.40
X.XX	±0.25
X.XXX	±0.15
Angle	± 3°
DIM	TOL

DRAW	JYHuang	DATE	2012/10/08
CHECK		DATE	
APPROVE		DATE	

SCALE	FIT
UNIT	mm
SIZE	A4
SHEET	1/1
PROJ.	

PART NO.
SEE TAB

TITLE:
2.54 EJECTOR HEADER 90° METAL LATCH
H=9.8

Customer NO.