HSF

NOTES:
Rated Current: 3.0AMP
Rated Voltage: 12V DC
Contact Resistance: 30mΩ max
Withstand Voltage: 1000V AC/DC
Insulation Resistance: 5000MΩ min
Operation Temperature: −55℃ to +105℃

Contact Material: Phosphor Bronze
Contact Plating: Au Over Ni
Insulator Material: PPS+30%G.F UL94V-0

Recommended P.C.B Layout(Top Side)
(PCB BOARD TOLERANCE±0.05)

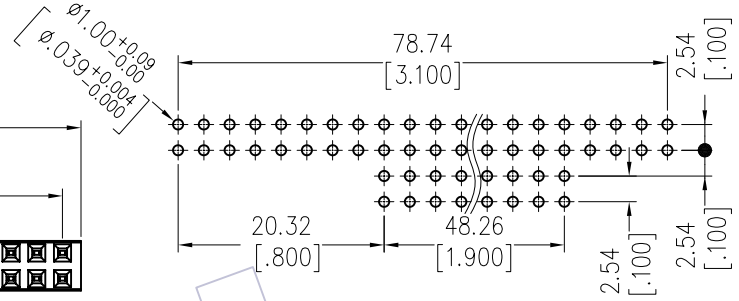

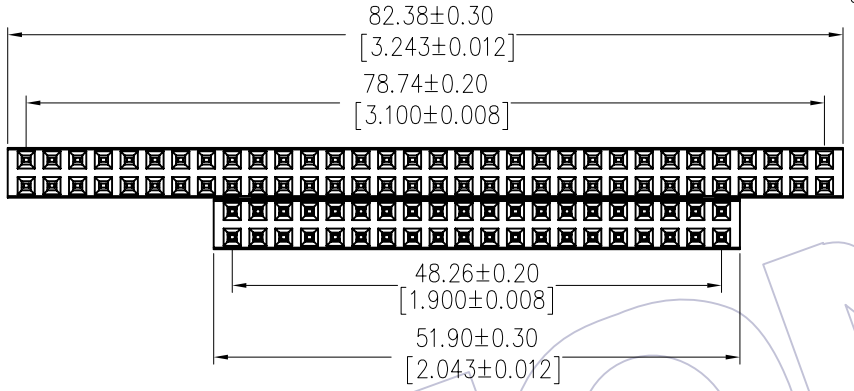

Ordering Information

2111A-2 XX S XX F Y N T 2

- No.of Pins per: 20P, 32P
- Contact Plating: G1=Fully 3u"Gold; G3=Fully 10u"Gold; G4=Fully 15u"Gold; H3=Mating 10u"Gold Tail 3u"Gold; H4=Mating 15u"Gold Tail 3u"Gold
- Packing: T=Tube

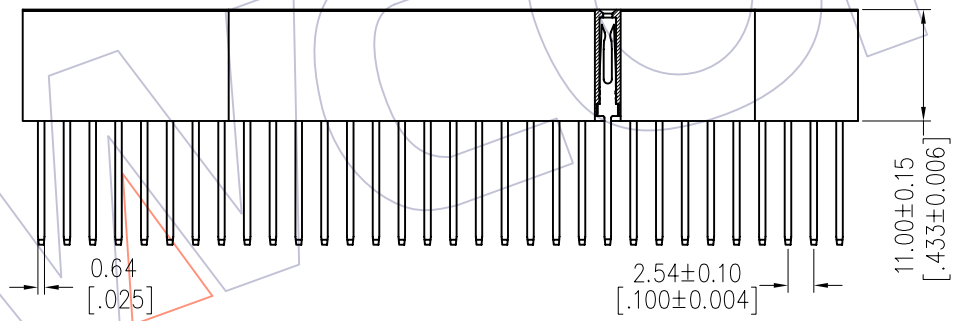

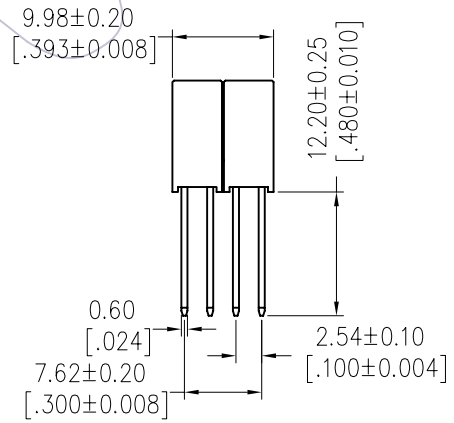

Item	Pitch	Mating
Standard	2.54	1125
Alternate		

ITEM	Pcs/Tube
2*20P	11
2*32P	7
2*20P+2*32P	7

REV	DATE	MODIFICATION DESCRIPTION	CHANGE
A0	2012/08/20	NEW	------

OPERATION	
X.X	±0.40
X.XX	±0.25
X.XXX	±0.15
Angle	± 3°
DIM	TOL

DRAW	JYHuang	DATE	2012/08/20
CHECK		DATE	
APPROVE		DATE	

SCALE	FIT
UNIT	mm
SIZE	A4
SHEET	1/1
PROJ.	

PART NO. 2111A-2XXSXXFYNT2

TITLE: 2.54 PC104 2*20P+2*32P 180° H=11.0 DIP=12.2

Customer NO.