HSF

NOTES:
Current Rating: 1.0AMP
Contact Resistance: 20mΩ Max
Withstand Voltage: 500V AC/DC
Insulation Resistance: 1000MΩ Min
Operation Temperature: −40℃ to +105℃

Contact Material:Phosphor Bronze
Contact plating:Sn Over Ni
Insulator Material:PA46+30%G.F UL94V−0

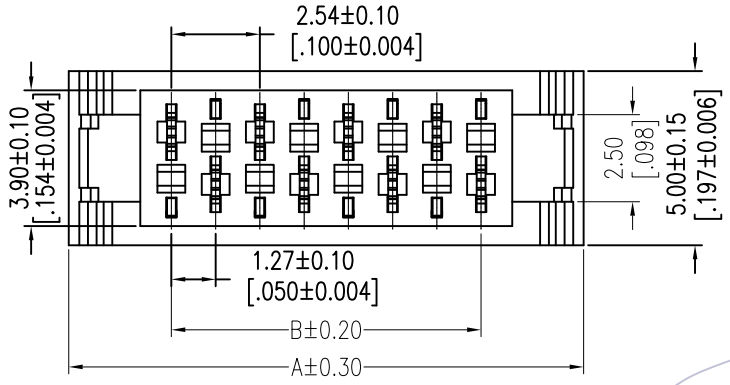

Recommended P.C.B Layout(Top Side)
(PCB BOARD TOLERANCE±0.05)

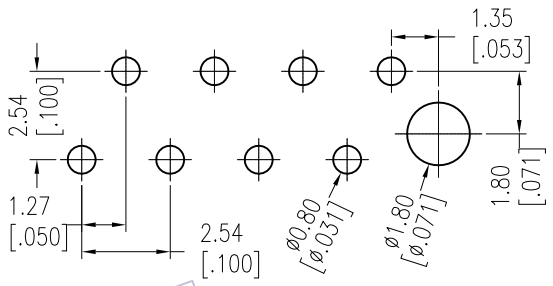

Ordering Information

3900- XX FS SN E W T 01

No.of Pins		Contact Plating	Insulator Material	Packing
04P	12P	SN=Tin	E=PA46	T=Tube
06P	14P			
08P	16P			
10P	18P			
	20P			

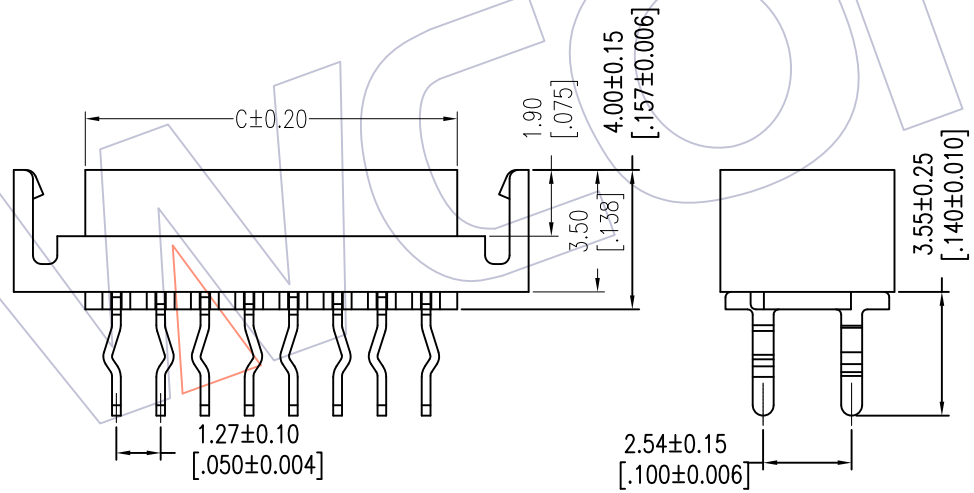

Circuit	Part No.	Dimension			Q'ty /Tube
		A	B	C	
04	3900−04FSSNEWT01	9.70	3.81	5.60	59
06	3900−06FSSNEWT01	12.24	6.35	8.14	47
08	3900−08FSSNEWT01	14.78	8.89	10.68	39
10	3900−10FSSNEWT01	17.32	11.43	13.22	33
12	3900−12FSSNEWT01	19.86	13.97	15.76	29
14	3900−14FSSNEWT01	22.40	16.51	18.30	25
16	3900−16FSSNEWT01	24.94	19.05	20.84	23
18	3900−18FSSNEWT01	27.48	21.59	23.38	21
20	3900−20FSSNEWT01	30.02	24.13	25.92	19

REV	DATE	MODIFICATION DESCRIPTION	CHANGE
A2	2014/05/28	Micro Match --Mini Match A2	
A0	2012/10/11	NEW	------

OPERATION	
X.X	±0.40
X.XX	±0.25
X.XXX	±0.15
Angle	± 3°
DIM	TOL

DRAW	DATE
JYHuang	2014/05/28
CHECK	DATE
APPROVE	DATE

SCALE	FIT
UNIT	mm
SIZE	A4
SHEET	1/1
PROJ.	

PART NO.
SEE TAB

TITLE:
Mini Match Socket 180° DIP
With Latch A2

Customer NO.