连接器网一一汇勤电子旗下网站，一站解决电气信号连接问题 http://www.Ljqw.top/ TEL：400-022-7728

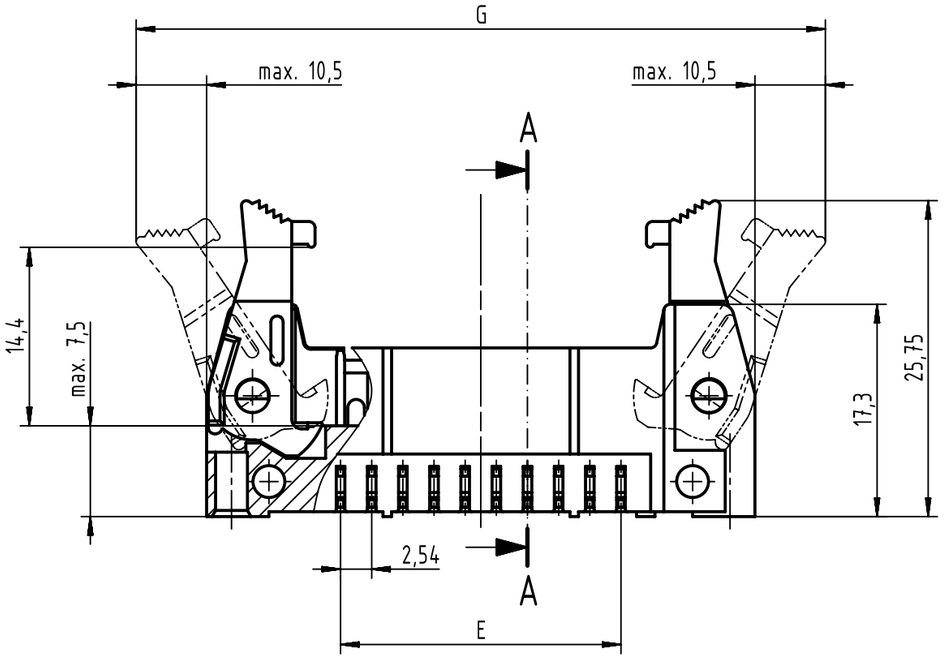

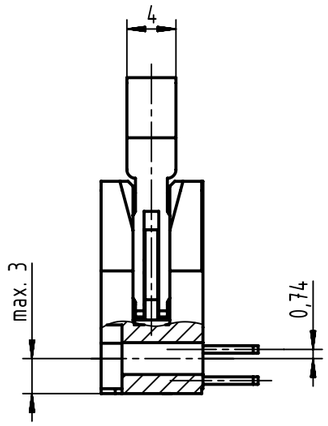

A-A

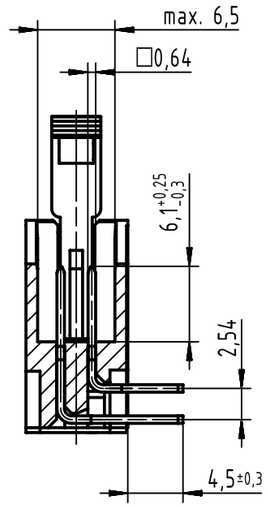

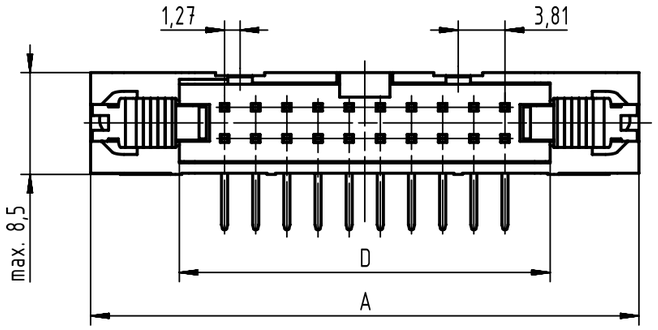

PCB layout
view component side
thickness up to 3,2

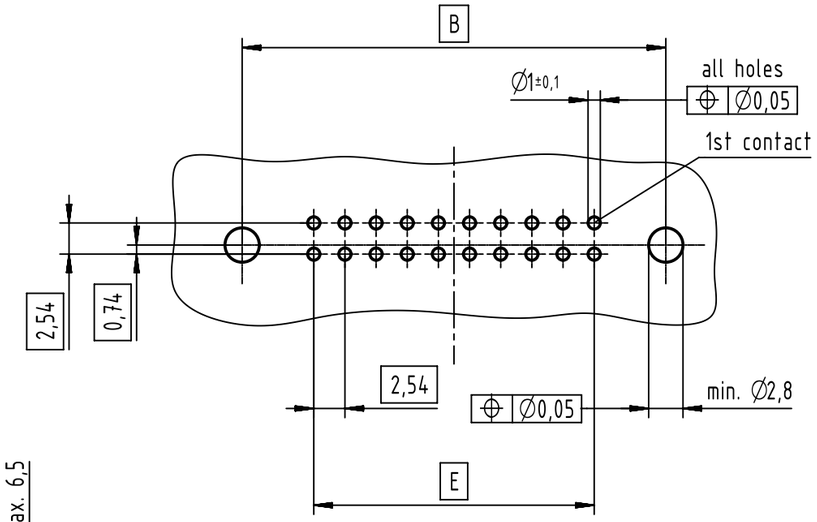

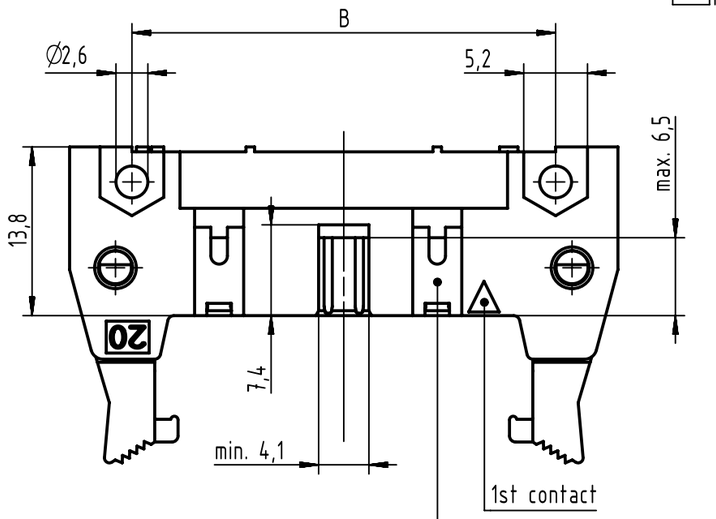

see table for coding,
feature arrangement and style

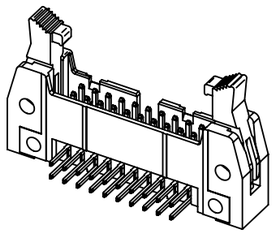

further information
see: DS 09181200001

full range of P/N's and
dimensions shown on page 2/2

coding style table

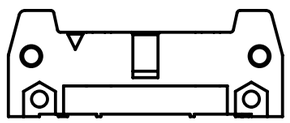

style A:
for connectors 6-pole

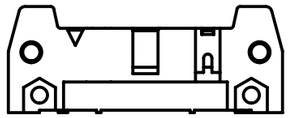

style B:
for connectors
from 10 to 14-pole

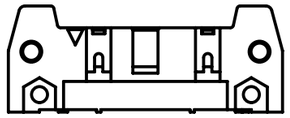

style C:
for connectors
from 16 to 64-pole

All Dimensions in mm Original Size DIN A3	Scale 2:1	Free size tol. IEC 60603-13			Ref. Sub. TB 09185XXX901 / 500000087654 / 2015-04-08
All rights reserved Department EC PD - DE	Created by STORCK	Inspected by TADJE	Standardisation KOHLER	Date 2015-12-21	State Final Release
HARTING Electronics GmbH D-32339 Espelkamp	Title SEK 18 male standard conn angled with long lever 4.5				Doc-Key / ECM-Nr. 100154464/UGD/013/A 500000094595
	Type TB	Number 09185XXX901		Rev. A	Page 1/2

连接器网一一汇勤电子旗下网站，一站解决电气信号连接问题 http://www.Ljqw.top/ TEL：400-022-7728

A3

连接器网一一汇勤电子旗下网站，一站解决电气信号连接问题 http://www.Ljqw.top/ TEL：400-022-7728

	performance level				dimensions				
	PL3	PL2	S4						
no. of contacts	part number	part number	part number	insulator colour	A max.	B	D	E	G
06	09 18 506 7901	09 18 506 6901	09 18 506 5901	grey	27,2	16,76	12,45	2,54 x 2 = 5,08	40,3
10	09 18 510 7901	09 18 510 6901	09 18 510 5901		32,3	21,84	17,53	2,54 x 4 = 10,16	45,4
14	09 18 514 7901	09 18 514 6901	09 18 514 5901		37,4	26,92	22,61	2,54 x 6 = 15,24	50,4
16	09 18 516 7901	09 18 516 6901	09 18 516 5901		39,9	29,46	25,15	2,54 x 7 = 17,78	53,0
20	09 18 520 7901	09 18 520 6901	09 18 520 5901		45,0	34,54	30,23	2,54 x 9 = 22,86	58,1
24	09 18 524 7901	09 18 524 6901	09 18 524 5901		50,1	39,62	35,91	2,54 x 11 = 27,94	63,2
26	09 18 526 7901	09 18 526 6901	09 18 526 5901		52,6	42,16	37,85	2,54 x 12 = 30,48	65,7
30	09 18 530 7901	09 18 530 6901	09 18 530 5901		58,0	47,24	43,83	2,54 x 14 = 35,56	68,6
34	09 18 534 7901	09 18 534 6901	09 18 534 5901		62,8	52,32	48,01	2,54 x 16 = 40,64	75,8
40	09 18 540 7901	09 18 540 6901	09 18 540 5901		70,4	59,94	55,63	2,54 x 19 = 48,26	83,5
50	09 18 550 7901	09 18 550 6901	09 18 550 5901		83,1	72,64	68,33	2,54 x 24 = 60,96	96,2
60	09 18 560 7901	09 18 560 6901	09 18 560 5901		95,8	85,34	81,03	2,54 x 29 = 73,66	108,9
64	09 18 564 7901	09 18 564 6901	09 18 564 5901		100,9	90,42	86,11	2,54 x 31 = 78,74	113,9
06	09 18 506 7901 001	09 18 506 6901 001	09 18 506 5901 001	black	27,2	16,76	12,45	2,54 x 2 = 5,08	40,3
10	09 18 510 7901 001	09 18 510 6901 001	09 18 510 5901 001		32,3	21,84	17,53	2,54 x 4 = 10,16	45,4
14	09 18 514 7901 001	09 18 514 6901 001	09 18 514 5901 001		37,4	26,92	22,61	2,54 x 6 = 15,24	50,4
16	09 18 516 7901 001	09 18 516 6901 001	09 18 516 5901 001		39,9	29,46	25,15	2,54 x 7 = 17,78	53,0
20	09 18 520 7901 001	09 18 520 6901 001	09 18 520 5901 001		45,0	34,54	30,23	2,54 x 9 = 22,86	58,1
24	09 18 524 7901 001	09 18 524 6901 001	09 18 524 5901 001		50,1	39,62	35,91	2,54 x 11 = 27,94	63,2
26	09 18 526 7901 001	09 18 526 6901 001	09 18 526 5901 001		52,6	42,16	37,85	2,54 x 12 = 30,48	65,7
30	09 18 530 7901 001	09 18 530 6901 001	09 18 530 5901 001		58,0	47,24	43,83	2,54 x 14 = 35,56	68,6
34	09 18 534 7901 001	09 18 534 6901 001	09 18 534 5901 001		62,8	52,32	48,01	2,54 x 16 = 40,64	75,8
40	09 18 540 7901 001	09 18 540 6901 001	09 18 540 5901 001		70,4	59,94	55,63	2,54 x 19 = 48,26	83,5
50	09 18 550 7901 001	09 18 550 6901 001	09 18 550 5901 001		83,1	72,64	68,33	2,54 x 24 = 60,96	96,2
60	09 18 560 7901 001	09 18 560 6901 001	09 18 560 5901 001		95,8	85,34	81,03	2,54 x 29 = 73,66	108,9
64	09 18 564 7901 001	09 18 564 6901 001	09 18 564 5901 001		100,9	90,42	86,11	2,54 x 31 = 78,74	113,9

All Dimensions in mm
Original Size DIN A3

Scale 1:1 | Free size tol. | Ref. | Sub. TB 09185XXX901 / 500000087654 / 2015-04-08

All rights reserved

Department EC PD - DE

HARTING Electronics GmbH
D-32339 Espelkamp

Created by	Inspected by	Standardisation	Date	State
STORCK	TADJE	KOHLER	2015-12-21	Final Release

Title: SEK 18 male standard conn angled with long lever 4.5

Doc-Key / ECM-Nr.: 100154464/UGD/013/A 500000094595

Type: TB | Number: 09185XXX901 | Rev.: A | Page: 2/2

连接器网一一汇勤电子旗下网站，一站解决电气信号连接问题 http://www.Ljqw.top/ TEL：400-022-7728

A3