连接器网一一汇勤电子旗下网站，一站解决电气信号连接问题 http://www.Ljcw.top/ TEL：400-022-7728

Board Layout
3:1

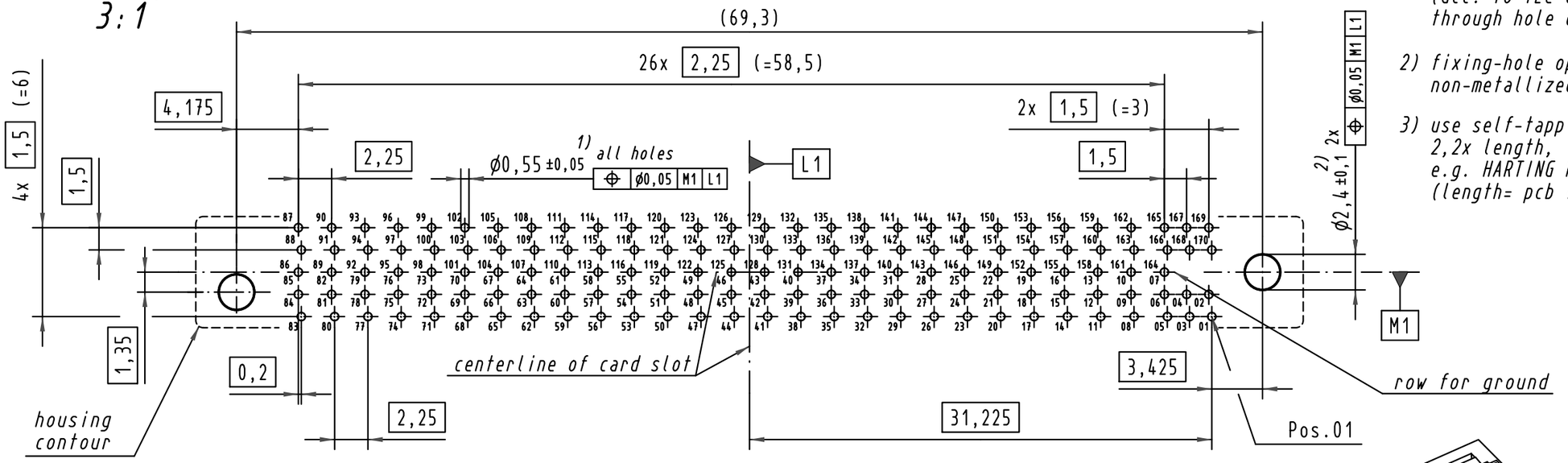

1) recommended drill hole Ø0,64±0,01mm
(acc. to IEC 60352-5)
through hole dia. (after plating): Ø0,55±0,05

2) fixing-hole optional
non-metallized drillings

3) use self-tapping screws for plastics
2,2x length,
e.g. HARTING Part.-no.: 09 06 001 9974
(length= pcb thickness + 6,5mm to 10mm)

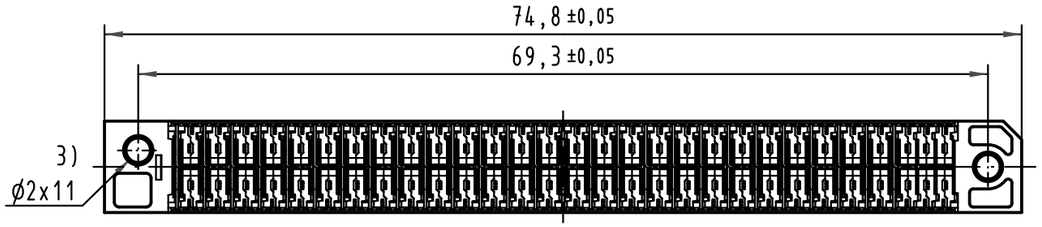

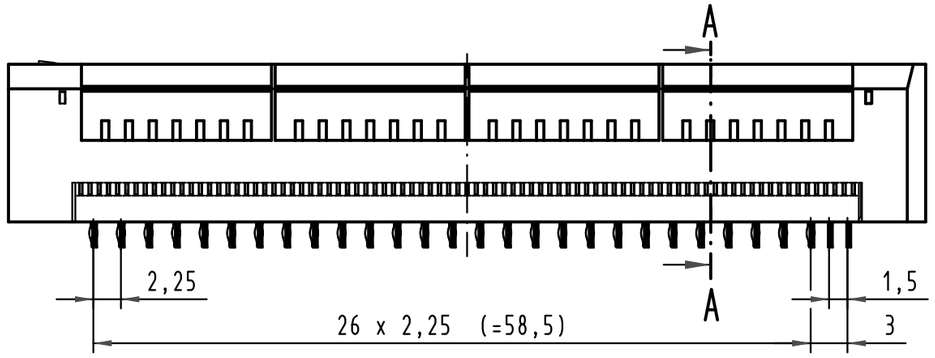

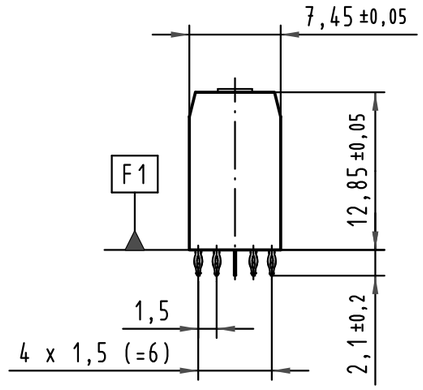

A-A

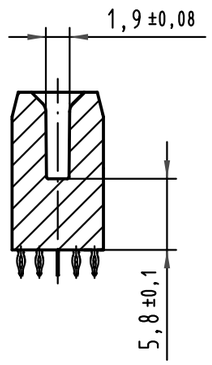

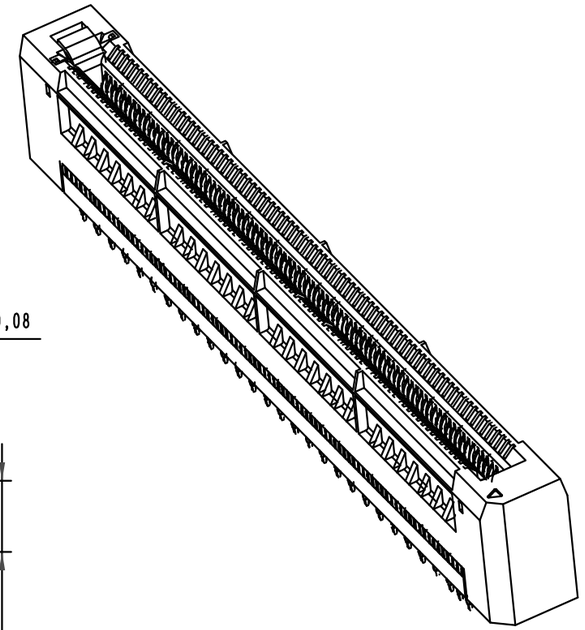

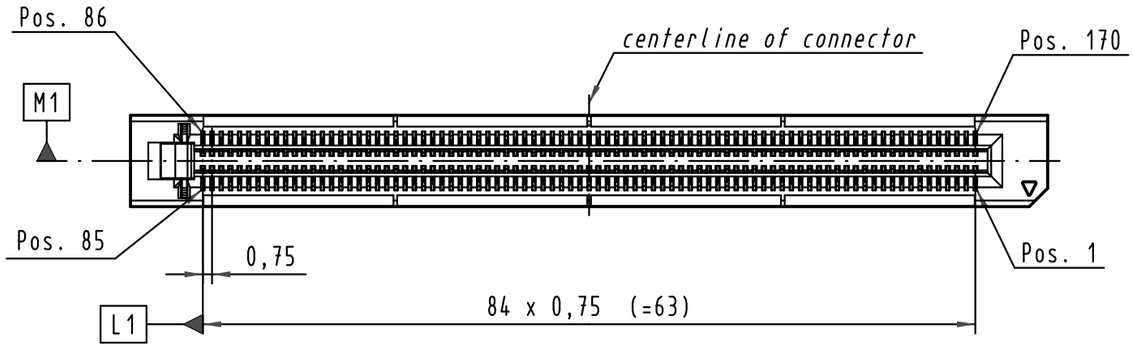

missing dimensions and information acc. to PICMG MicroTCA.0
(Micro Telecommunications Computing Architecture Base Specification)

con:card+

All Dimensions in mm Original Size DIN A 3			Techn. Character.			Nicht tolerierte Maße/ *Free size tolerances*
				Dat.	Name	Maßstab/*Scale* 2:1 3:1
			Detail.	25.09.09	hsv	AdvancedMC connector for MicroTCA 170 pole, press-fit
			Insp.	25.09.09	Lue.	
			Stand.			
35928			HARTING Electronics GmbH & Co. KG D-32339 ESPELKAMP			TB 16 11 170 5202 000
Mod.	Dat.	Name				Sub.

Blatt/ *page* /

Alle Rechte vorbehalten/ All rights reserved

连接器网一一汇勤电子旗下网站，一站解决电气信号连接问题 http://www.Ljcw.top/ TEL：400-022-7728