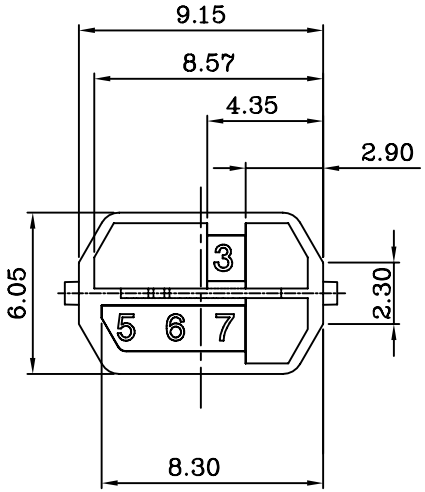

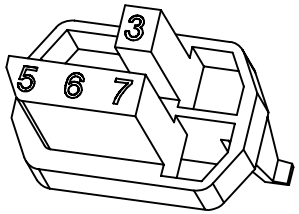

NOTES:
1. ALL DIMENSIONS ARE IN MMS.
2. MATERIAL:HIGH TEMPERATURE THERMOPLASTIC.(STRAWBERRY RED)
3. ROHS DIRECTIVE COMPLIANCE.

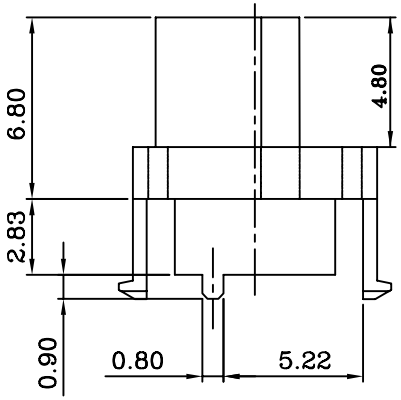

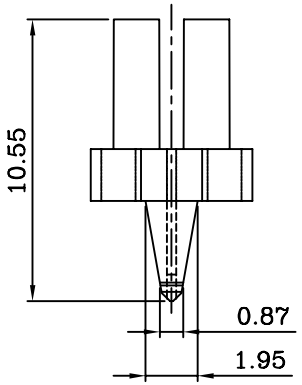

REV.	ECN. NO.	DESCRIPTION	DATE	DRAWN	APPD
A	***	Release	7/26'06	Jexan	Alan

DESIGN UNITS ■ mm □ INCH		
GENERAL TOLERANCES: (UNLESS SPECIFIED)	mm	INCH
4 PLACE	±**	±.**
3 PLACE	±**	±.**
2 PLACE	±0.10	±.**
1 PLACE	±**	±.**
ANGULAR:	X°±4°	.X°±2°

NAME: MetCon-2 CODE KEY SCOKET CONNECTOR

PART NO: 1092951318

APPD: 蘇侯安 7/27'06

CHKD: 楊海文 7/27'06

DRAWN: 何潔賢 7/26'06

NEXTRONICS ENGINEERING CORP.

TITLE: CUSTOM DWG C

DWG. NO: C-1092951318

SCALE:	SHEET:	REV.:
1/5	1/1	A

A版

NPF-RD40040