NOTES:

1 THIS CONNECTOR IS DESIGNED TO MEET THE APPLICABLE PERFORMANCE REQUIREMENTS OF IEC 61076-4-101 AND BELLCORE GR-1217-CORE

2 RoHS DIRECTIVE COMPLIANCE, MAX SOLDERING TEMPERATURE 225°C.

MATERIALS

(1) Insulators — Thermoplastic Polyester, glass filled
Rated UL 94V-0, Color: Gray

(2) Pin contacts — Copper Alloy
Finish: Mating Zone=Gold
Compliant Zone=Matte Tin
Performance Class 2= 250 cycles

PERFORMANCE CHARACTERISTICS

Insulation resistance — 10,000 megohms minimum
Dielectric withstanding voltage (at sea level) — 750 Vrms
Current rating — 1 amp @70°C, fully loaded
1.5 amp @20°C, fully loaded
Operating temperature range — -55°C to +125°C
Contact resistance — 20 milliohms maximum

COMPLIANT CONTACT

Max.Insertion Force (per contact) — 22.5 lbs./100 N
Min. Retention force (per contact) — 4.5 lbs./20 N

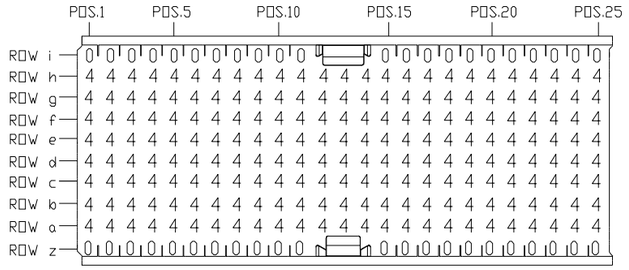

SELECTIVE LOADING PATTERN

SELECTIVE LOADING CHART		
PIN CODE	MATING LENGTH OF CONTACTS	CONTACT TAIL LENGTHS
	M	L
4	.209/5.30	.146/3.70

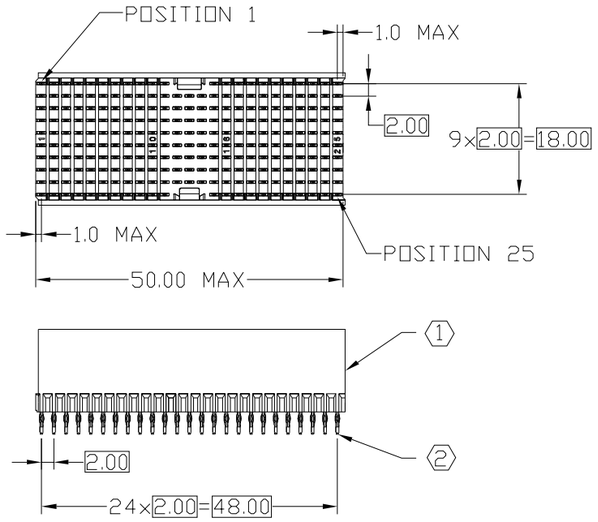

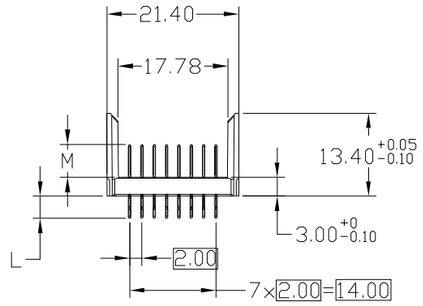

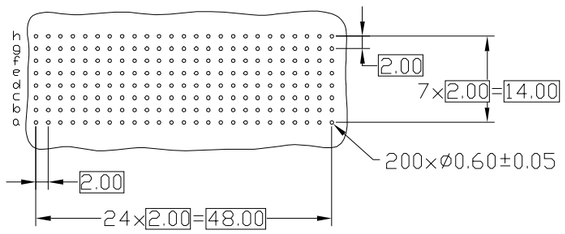

RECOMMENDED PC BOARD REQUIREMENTS
(COMPONENT SIDE BOARD SHOWN)

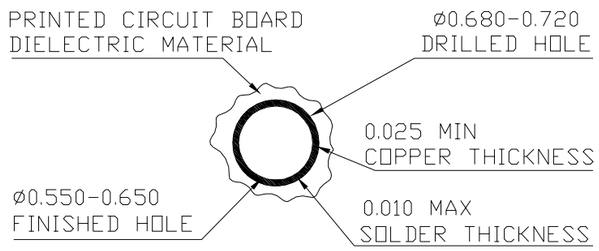

THRU HOLE PLATING
SCALE 20:1

REV.	ECN. NO.	DESCRIPTION	DATE	DRAWN	APPD
A	***	Release	5/16'11	廖小瓊	楊海文

DESIGN UNITS ■ mm □ INCH

GENERAL TOLERANCES: (UNLESS SPECIFIED)

	mm	INCH
4 PLACE	±**	±.**
3 PLACE	±0.08	±.**
2 PLACE	±0.15	±.**
1 PLACE	±0.20	±.**
ANGULAR:	X°±**	.X°±**

NAME: 2MM HEADER DE TYPE

PART NO: NX5DEAJ01A10PA

APPD: 楊海文 5/16'11

CHKD: 楊海文 5/16'11

DRAWN: 廖小瓊 5/16'11

nextron® NEXTRONICS ENGINEERING CORP.

TITLE: CUSTOMER DWG. C

DWG. NO: 010-0000-886-NX5DEAJ01A10PA

SCALE:	SHEET:	REV.:
1 / 1	1 / 1	A

A1版

NPF-RD40040