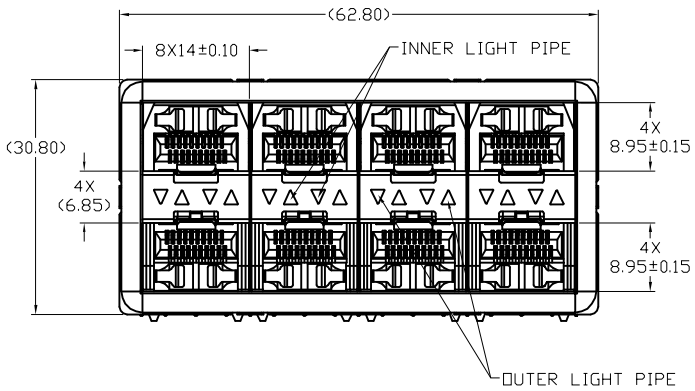

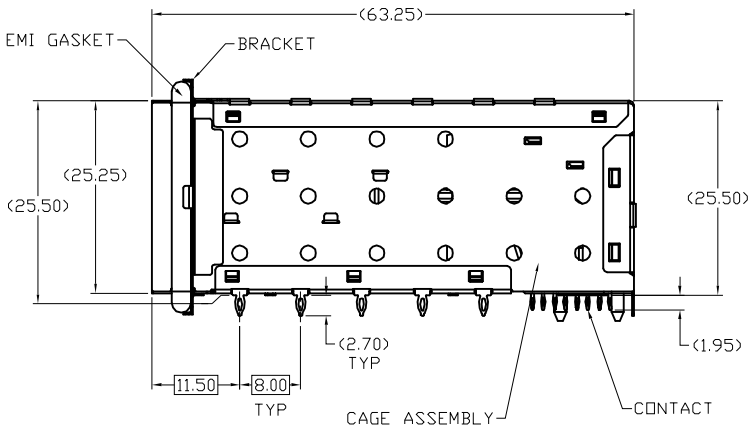

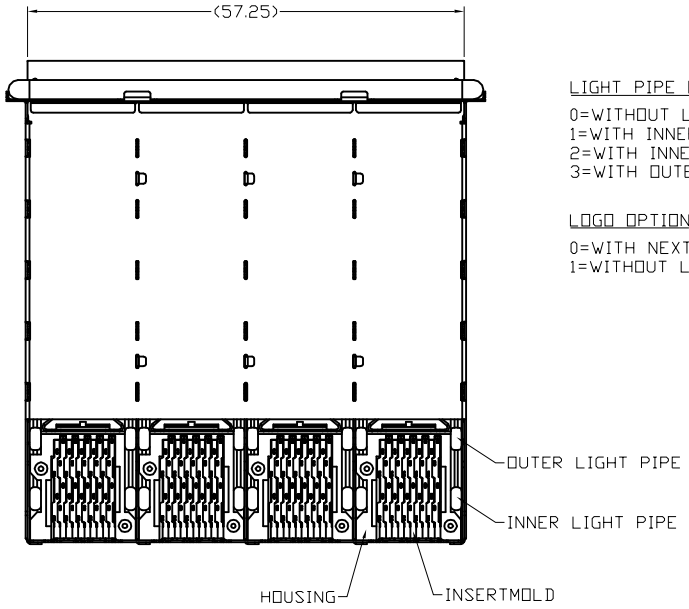

NEXTRON PART NUMBER DESCRIPTION

Z-8242410000X2X

LIGHT PIPE OPTION

0=WITHOUT LIGHT PIPE
1=WITH INNER & OUTER LIGHT PIPE
2=WITH INNER LIGHT PIPE
3=WITH OUTER LIGHT PIPE

LOGO OPTION

0=WITH NEXTRON LOGO
1=WITHOUT LOGO

NOTE:

1. MATERIAL:
   CAGE ASSEMBLY: COPPER ALLOY, 0.25mm THICKNESS.
   BRACKET: COPPER ALLOY, 0.25mm THICKNESS.
   HOUSING: HIGH TEMPERATURE THERMOPLASTIC, UL94V-0, COLOR: BLACK.
   INSERTMOLD: HIGH TEMPERATURE THERMOPLASTIC, UL94V-0, COLOR: BLACK.
   LIGHT PIPE: POLYCARBONATE, CLEAR.
   CONTACT: COPPER ALLOY, 0.20mm THICKNESS.
   EMI GASKET: CONDUCTIVE ELASTOMER.

2. FINISH:
   CONTACT: GOLD PLATED ON CONTACT AREA; MATTE TIN PLATED ON TAIL AREA.
   CAGE: NICKEL PLATED.

3. PC BOARD THICKNESS: 1.5mm MIN.

4. THIS PART MEETS THE RESTRICTION OF HAZARDOUS SUBSTANCES IN ELECTRICAL AND ELECTRONIC EQUIPMENT (ROHS) DIRECTIVE (2011/65/EU).

REV.	DESCRIPTION	DATE	APPD
B	ECN-130255	07/01'14	楊海文

UNITS ■mm □INCH		
GENERAL TOLERANCES: (UNLESS SPECIFIED)	mm	INCH
4 PLACE	± **	±. **
3 PLACE	± 0.10	±. **
2 PLACE	± 0.20	±. **
1 PLACE	± 0.25	±. **
ANGULAR:	X°± 1°	.X°± **

NAME: SFP+ 2X4 CAGE AND CONNECTOR ASSEMBLY, PRESS FIT, WITH EMI GASKET

PART NO: Z-8242410000X2X

APPD: 楊海文 07/01'14

CHKD: 楊海文 07/01'14

DRAWN: 廖小瓊 07/01'14

nextron® NEXTRONICS ENGINEERING CORP.

TITLE: CUSTOMER DWG.

DWG NO: 010-0000-A07 C

SCALE:	SHEET:	REV.:
3/2	1/4	B

A1

D-PRD-034

连接器网一一汇勤电子旗下网站，一站解决电气信号连接问题 http://www.ljqw.top/ TEL：400-022-7728

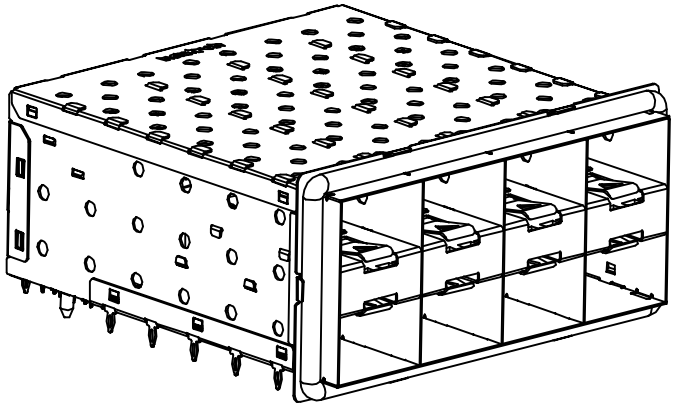

Z-824241000002X AS SHOWN
WITHOUT LIGHT PIPE

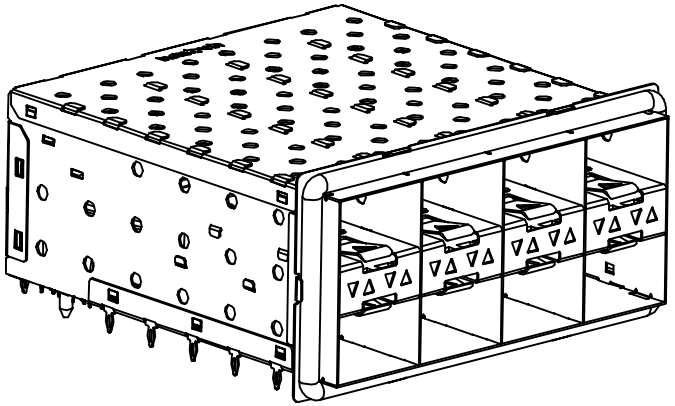

Z-824241000012X AS SHOWN
WITH INNER & OUTER LIGHT PIPES

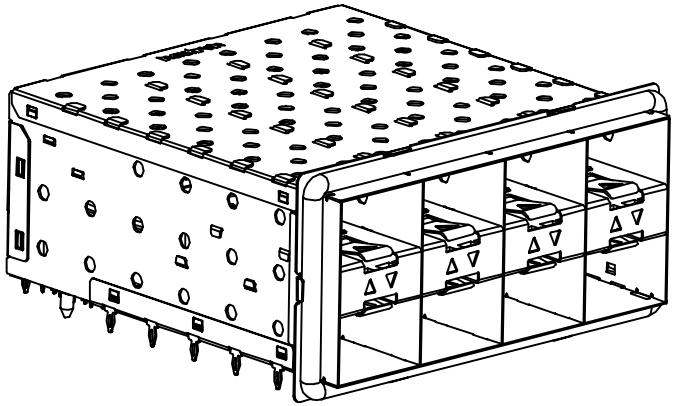

Z-824241000022X AS SHOWN
WITH INNER LIGHT PIPES

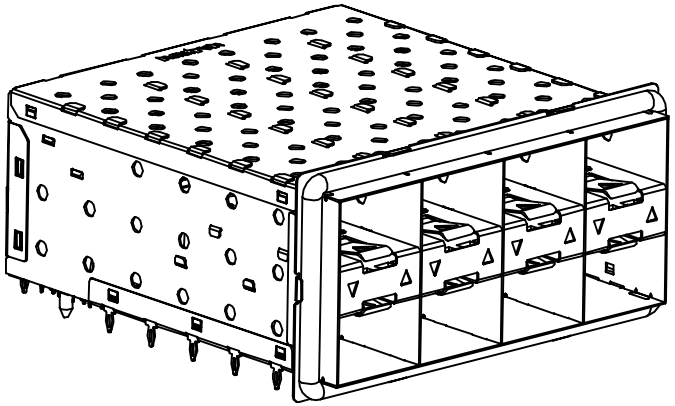

Z-824241000032X AS SHOWN
WITH OUTER LIGHT PIPES

REV.	DESCRIPTION	DATE	APPD
B	ECN-130255	07/01'14	楊海文

UNITS ■mm □INCH		
GENERAL TOLERANCES: (UNLESS SPECIFIED)	mm	INCH
4 PLACE	± **	±. **
3 PLACE	± 0.10	±. **
2 PLACE	± 0.20	±. **
1 PLACE	± 0.25	±. **
ANGULAR:	X°± 1°	.X°± **

NAME: SFP+ 2X4 CAGE AND CONNECTOR ASSEMBLY, PRESS FIT, WITH EMI GASKET

PART NO: Z-8242410000X2X

APPD: 楊海文 07/01'14

CHKD: 楊海文 07/01'14

DRAWN: 廖小瓊 07/01'14

nextron®
NEXTRONICS ENGINEERING CORP.

TITLE: CUSTOMER DWG.

DWG NO: 010-0000-A07 C

SCALE:	SHEET:	REV.:
3/2	2/4	B

A1

D-PRD-034

连接器网一一汇勤电子旗下网站，一站解决电气信号连接问题 http://www.ljqw.top/ TEL：400-022-7728

连接器网一一汇勤电子旗下网站，一站解决电气信号连接问题 http://www.ljqw.top/ TEL：400-022-7728

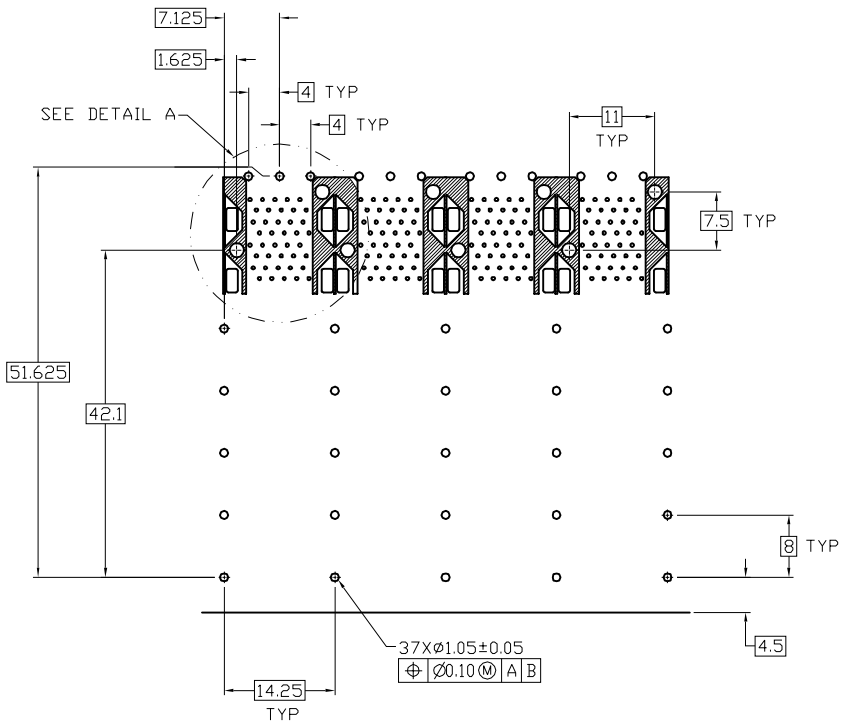

RECOMMENDE PCB LAYOUT
COMPONENT SIDE OF BOARD

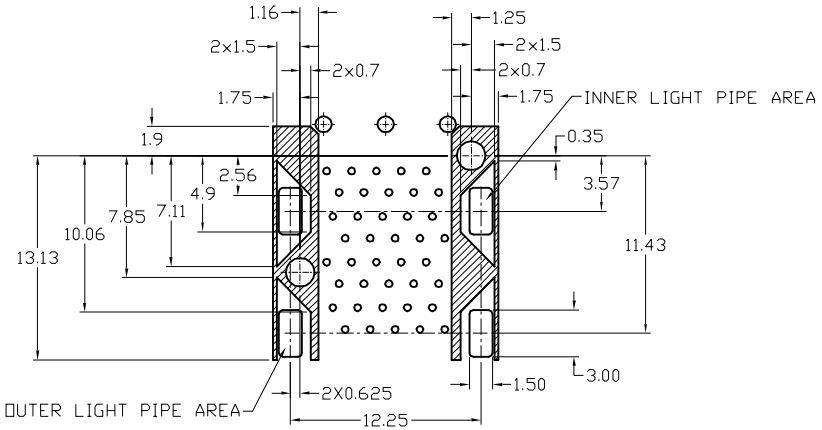

DETAIL A
KEEPOUT ZONE
SCALE 2:1

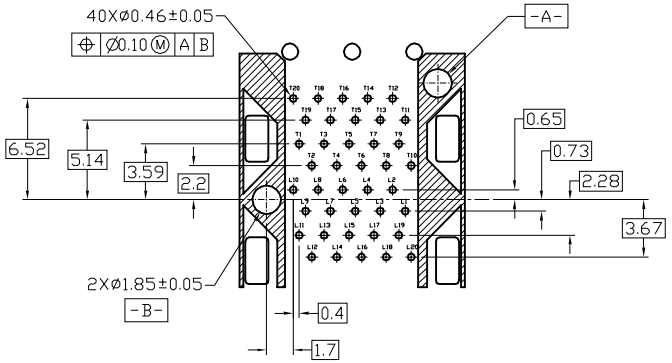

DETAIL A
SCALE 2:1

REV.	DESCRIPTION	DATE	APPD
B	ECN-130255	07/01'14	楊海文

UNITS
■mm □INCH

GENERAL TOLERANCES:
(UNLESS SPECIFIED)

	mm	INCH
4 PLACE	± **	±. **
3 PLACE	± 0.10	±. **
2 PLACE	± 0.20	±. **
1 PLACE	± 0.25	±. **
ANGULAR:	X°± 1°	.X°± **

NAME: SFP+ 2X4 CAGE AND CONNECTOR ASSEMBLY, PRESS FIT, WITH EMI GASKET

PART NO:
Z-8242410000X2X

APPD: 楊海文 07/01'14
CHKD: 楊海文 07/01'14
DRAWN: 廖小瓊 07/01'14

nextron®
NEXTRONICS ENGINEERING CORP.

TITLE:
CUSTOMER DWG.

DWG NO: 010-0000-A07 C

SCALE:	SHEET:	REV.:
3/2	3/4	B

A1

D-PRD-034

连接器网一一汇勤电子旗下网站，一站解决电气信号连接问题 http://www.ljqw.top/ TEL：400-022-7728

连接器网一一汇勤电子旗下网站，一站解决电气信号连接问题 http://www.ljqw.top/ TEL：400-022-7728

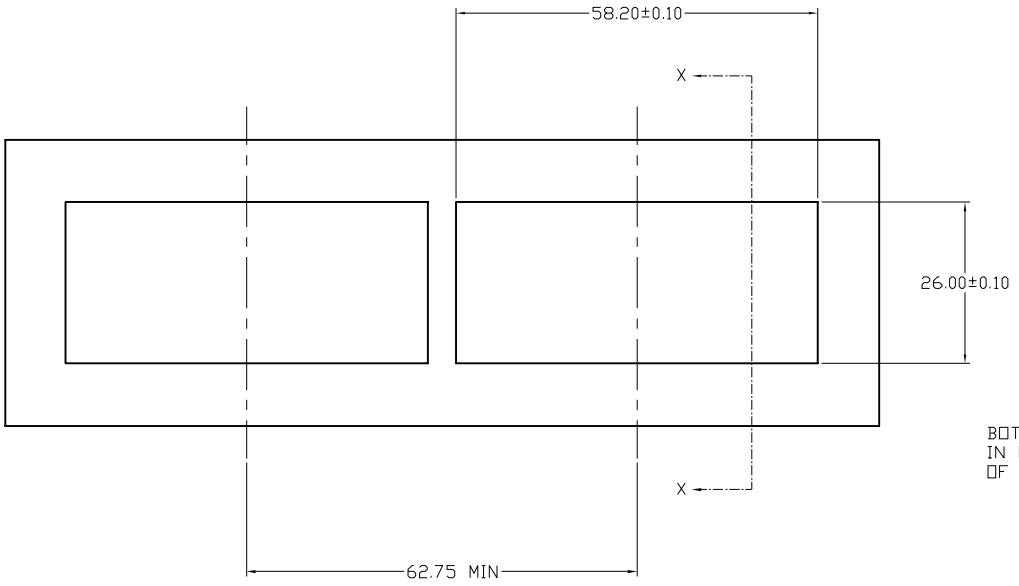

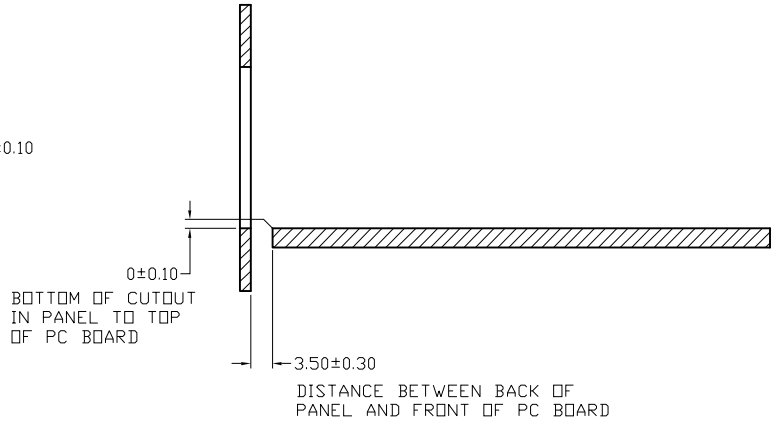

SECTION X-X
SCALE 1:1

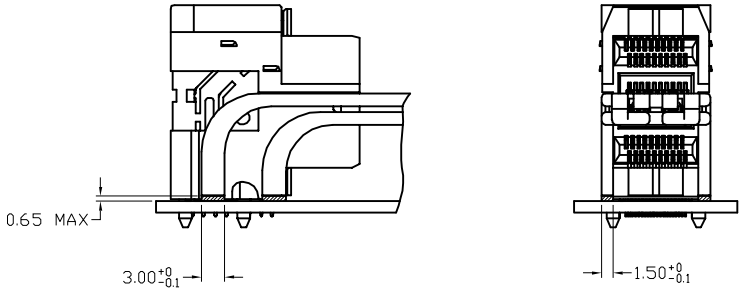

LED CLEARANCE REQUIREMENTS
SCALE 1:1

UNITS ■mm □INCH			NAME: SFP+ 2X4 CAGE AND CONNECTOR ASSEMBLY, PRESS FIT, WITH EMI GASKET	nextron® NEXTRONICS ENGINEERING CORP.	
GENERAL TOLERANCES: (UNLESS SPECIFIED)	mm	INCH	PART NO: Z-8242410000X2X	TITLE: CUSTOMER DWG.	
4 PLACE	± **	±. **	APPD: 楊海文 07/01'14	DWG NO: 010-0000-A07	C
3 PLACE	± 0.10	±. **			
2 PLACE	± 0.20	±. **	CHKD: 楊海文 07/01'14	SCALE: 3/2	SHEET: 4/4
1 PLACE	± 0.25	±. **			REV.: B
ANGULAR:	X°± 1°	.X°± **	DRAWN: 廖小瓊 07/01'14		

REV.	DESCRIPTION	DATE	APPD
B	ECN-130255	07/01'14	楊海文

A1

D-PRD-034

连接器网一一汇勤电子旗下网站，一站解决电气信号连接问题 http://www.ljqw.top/ TEL：400-022-7728