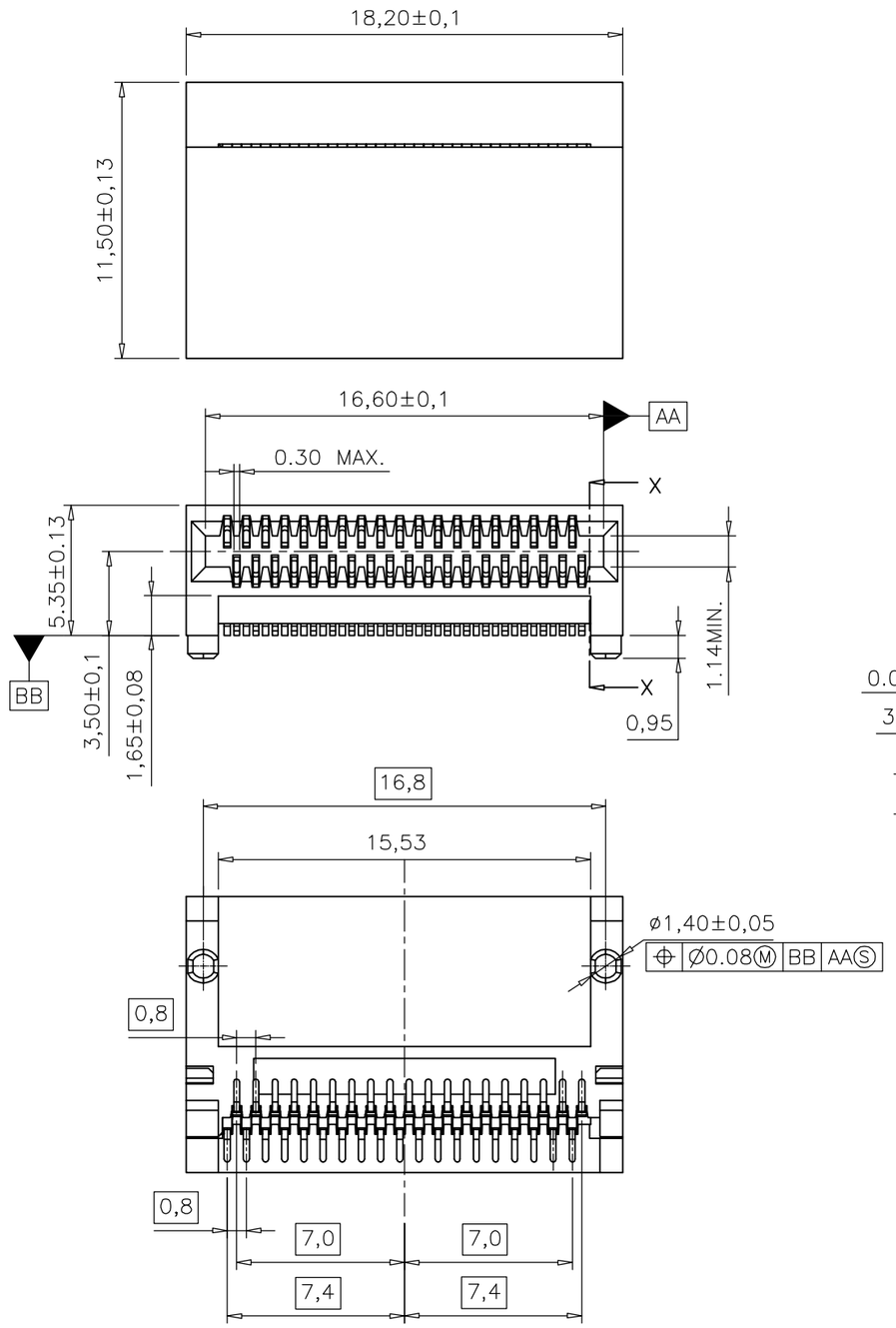

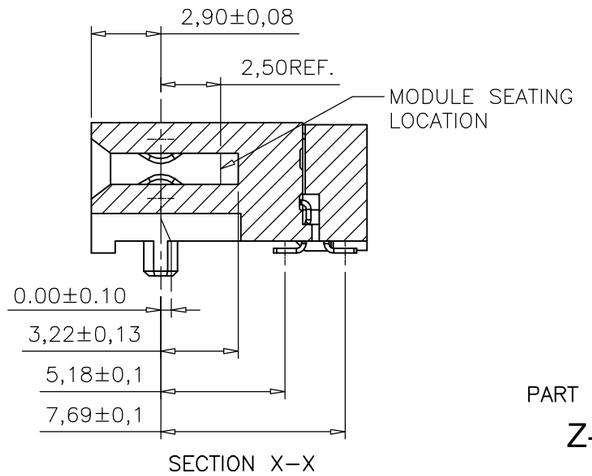

NOTES:
ELECTRICAL CHARACTERISTICS
CONTACT CURRENT RATING: 0.5 Amps Max.
VOLTAGE RATING: 30 Volts AC (RMS)/DC Max.
CONTACT RESISTANCE: ΔR 10 MILLIOHMS Max.
FOR SIGNAL CONTACTS
DIELECTRIC WITHSTANDING VOLTAGE: 300V AC

MATERIALS
CONTACTS: COPPER ALLOY
HOUSING: HIGH TEMPERATURE THERMOPLASTIC 94V–0,BLACK

FINISH:
OPTION 1:
CONTACT ARER: 15u" MIN GOLD OVER 50u" MIN NICKEL
SOLDER ARER: 100u" MIN TIN OVER 50u" MIN NICKEL

OPTION 2:
CONTACT ARER: 30u" MIN GOLD OVER 50u" MIN NICKEL
SOLDER ARER: 100u" MIN TIN OVER 50u" MIN NICKEL

ENVIRONMENT
OPERATION TEMPERATURE:–20°C TO +85°C

THIS PRODUCT COMPLY TO ROHS DIRECTIVE 2011/65/EU

PART NUMBER:

Z-8350011 X X 000 1

PLATING TYPE
0= 15u" Au ON CONTACT AREA
100u" MIN MATTE TIN ON TAIL AREA
1= 30u" Au ON CONTACT AREA
100u" MIN MATTE TIN ON TAIL AREA

PACKAGING DEFINITION
1= TAPE & REEL
2= TRAY

REV.	DESCRIPTION	DATE	APPD
A	ECR–NC130158	2013/11/27	
X4	Adapted to automated production	2013/06/03	楊海文
X3	ECR–NC0006	2013/01/11	楊海文

UNITS
■mm □ INCH

GENERAL TOLERANCES:
(UNLESS SPECIFIED)

	mm	INCH
4 PLACE	±0.05	±.**
3 PLACE	±0.10	±.**
2 PLACE	±0.15	±.**
1 PLACE	±0.25	±.**
ANGULAR:	X°±2°	.X°±1°

NAME: QSFP CONNECTOR

PART NO: Z–8350011XX0001

APPD: 楊海文 2013/11/27

CHKD: 廖小瓊 2013/11/27

DRAWN: 曾定勇 2013/11/27

nextron® NEXTRONICS ENGINEERING CORP.

TITLE: CUSTOMER DWG.

DWG NO: 010–0000–945 C

SCALE:	SHEET:	REV.:
4:1	1/2	A

A0 D–PRD–034

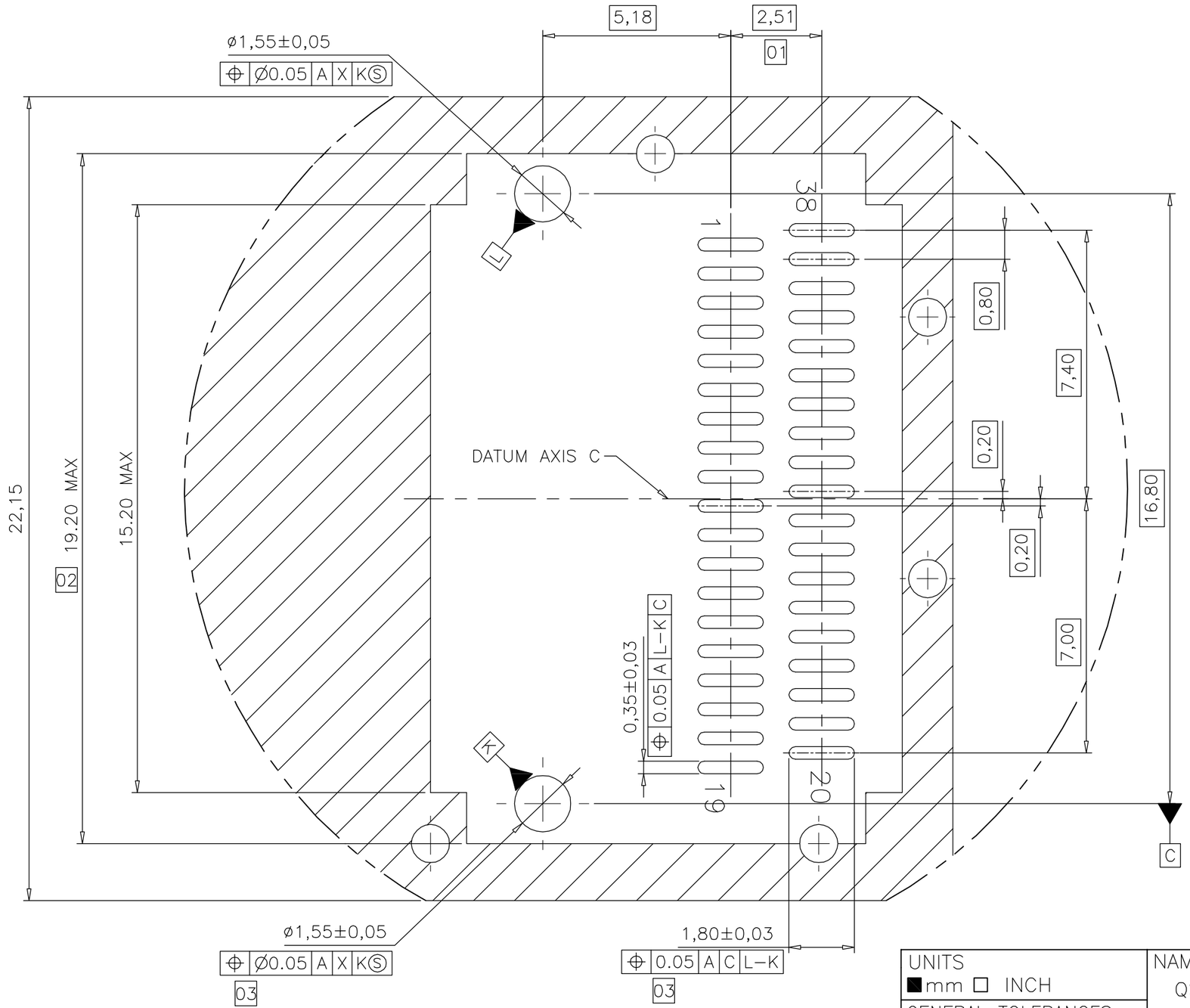

NOTES:(CONTINUE)

01. CENTERLINE OF PAD

02. SURFACE TRACES PERMITTED WITHIN THIS LENGTH

03. DATUM A IS THE TOP SURFACE OF THE HOST BOARD

REV.	DESCRIPTION	DATE	APPD
A	ECR-NC130158	2013/11/27	
X4	Adapted to automated production	2013/06/03	楊海文
X3	ECR-NC0006	2013/01/11	楊海文

UNITS ■mm □ INCH

GENERAL TOLERANCES: (UNLESS SPECIFIED)

	mm	INCH
4 PLACE	±0.05	±.**
3 PLACE	±0.10	±.**
2 PLACE	±0.15	±.**
1 PLACE	±0.25	±.**
ANGULAR:	X°±2°	.X°±1°

NAME: QSFP CONNECTOR

PART NO: Z-8350011XX0001

APPD: 楊海文 2013/11/27

CHKD: 廖小瓊 2013/11/27

DRAWN: 曾定勇 2013/11/27

nextron® NEXTRONICS ENGINEERING CORP.

TITLE: CUSTOMER DWG.

DWG NO: 010-0000-945 C

SCALE:	SHEET:	REV.:
4:1	2/2	A

A0

D-PRD-034