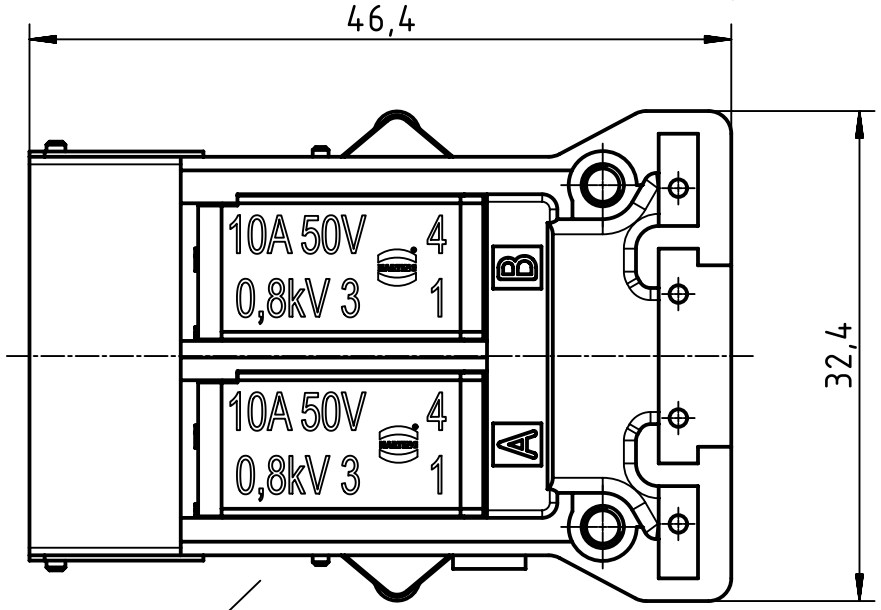

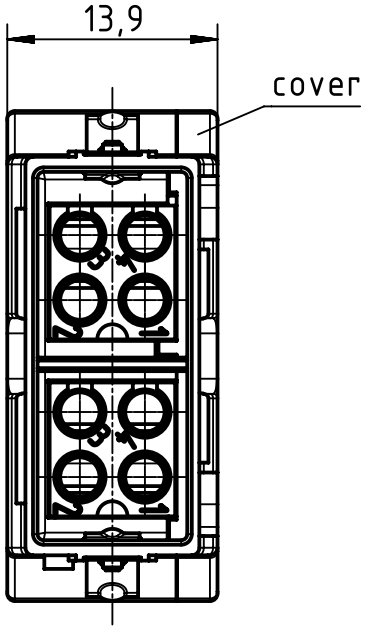

Pin	color
1A	white/green
2A	white/orange
3A	green
4A	orange
1B	white/brown
2B	white/blue
3B	brown
4B	blue

arrangement without cover

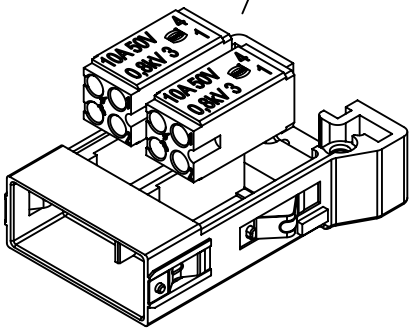

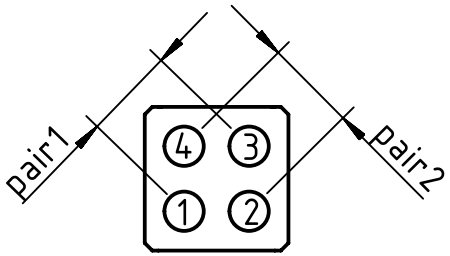

delivery in partly assembled parts and individual parts

All Dimensions in mm Original Size DIN A4	Scale 1:1	Free size tol.		Ref. Sub.	
All rights reserved Department EL PD - DE	Created by FINKEV	Inspected by RIEPE	Standardisation TIEMANNA	Date 2016-03-18	State Final Release
HARTING Electric GmbH & Co. KG D-32339 Espelkamp	Title Han MegaBit Single Entry, M + shield				Doc-Key / ECM-Nr. 100611394/UGD/002/B 500000101995
	Type TB	Number 09 14 008 3022		Rev. B	Page 1/1

A4