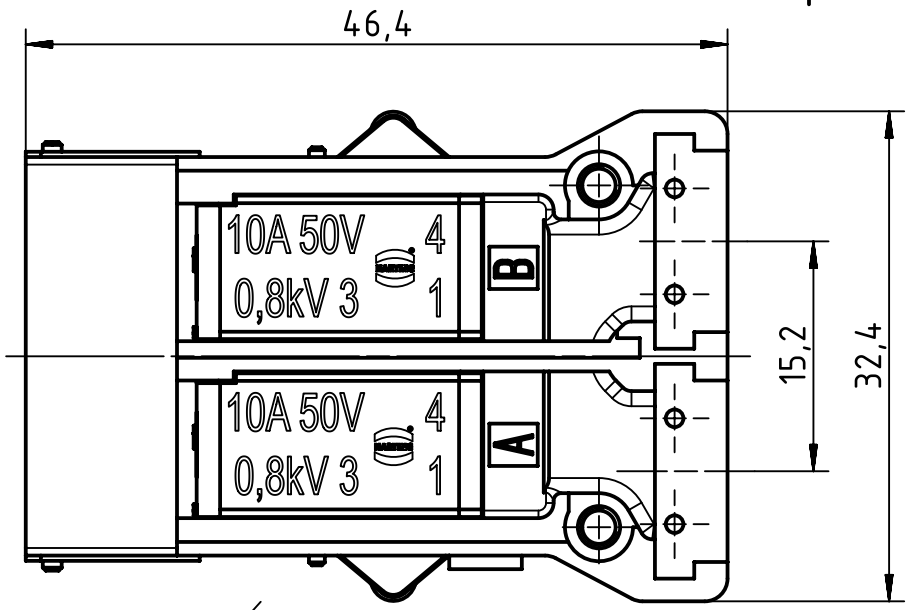

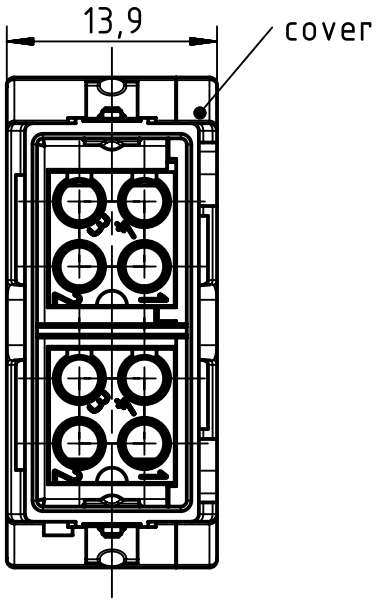

arrangement without cover

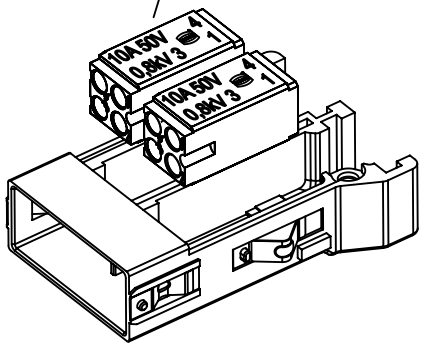

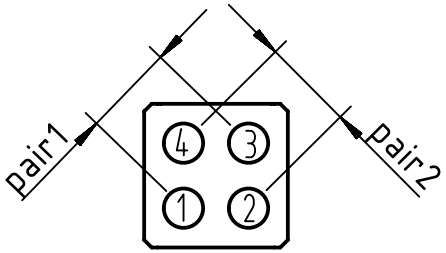

pin	10BASE-T 100BASE-TX	color
1	Tx+	white/orange
2	Rx+	white/green
3	Tx-	orange
4	Rx-	green

kind of delivery: piece parts

All Dimensions in mm
Original Size DIN A4

Scale 2:1

Free size tol.

Ref.

Sub.

All rights reserved

Department EL PD - DE

HARTING Electric GmbH & Co. KG
D-32339 Espelkamp

Created by	Inspected by	Standardisation	Date	State
FINKEV	RIEPE	TIEMANNA	2015-10-12	Final Release

Title: Han Megabit HMC insert male (shield-GND)

Doc-Key / ECM-Nr.
100623247/UGD/002/A
500000089170

Type: TB

Number: 09 14 208 3017

Rev.: A

Page: 1/1

A4