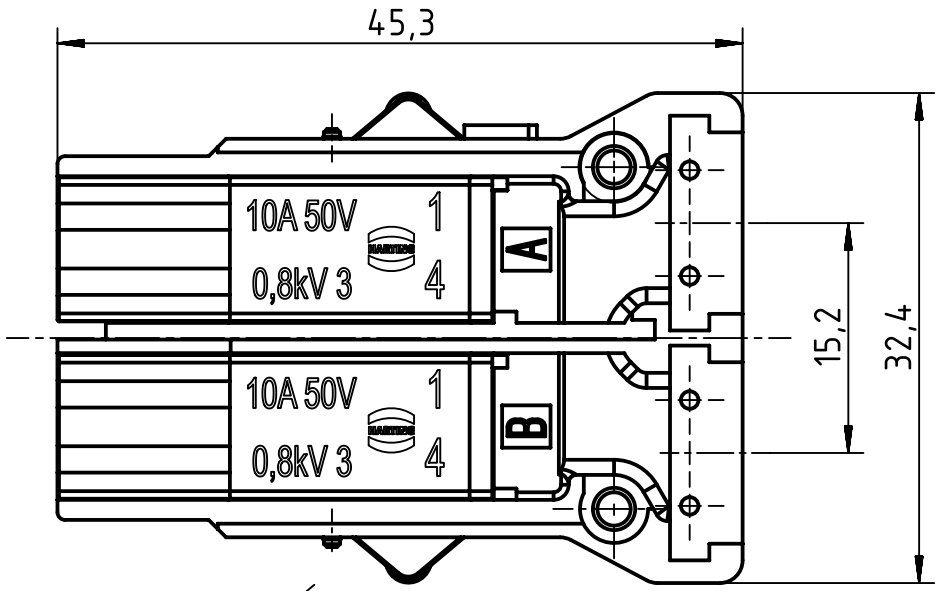

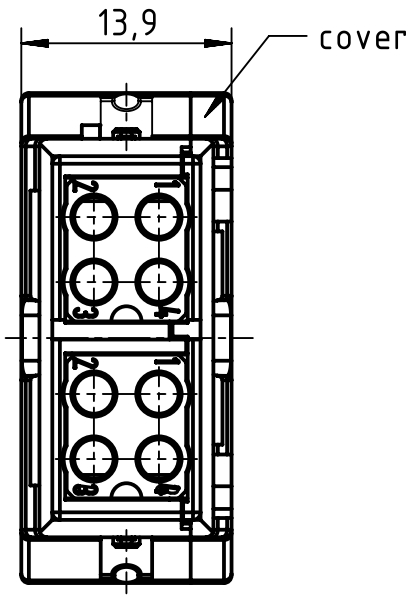

arrangement without cover

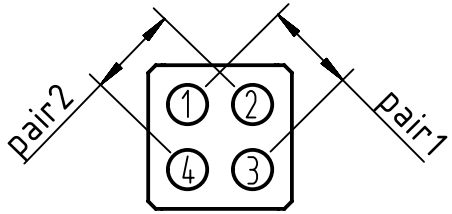

pin	10BASE-T 100BASE-TX	color
1	Tx+	white/orange
2	Rx+	white/green
3	Tx-	orange
4	Rx-	green

kind of delivery: piece parts

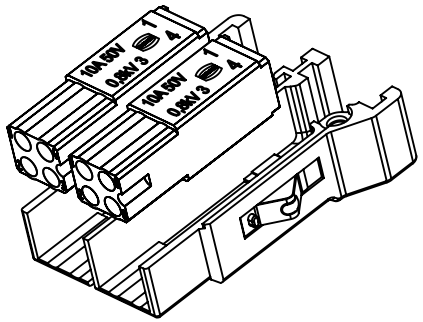

All Dimensions in mm Original Size DIN A4	Scale 1:1	Free size tol.		Ref. Sub.	
All rights reserved Department EL PD - DE	Created by FINKEV	Inspected by RIEPE	Standardisation TIEMANNA	Date 2016-07-29	State Approved
HARTING Electric GmbH & Co. KG D-32339 Espelkamp	Title Han Megabit HMC insert fem. (shield-GND)				Doc-Key / ECM-Nr. 100623249/UGD/002/B 500000089170
	Type TB	Number 09 14 208 3117		Rev. B	Page 1/1

A4